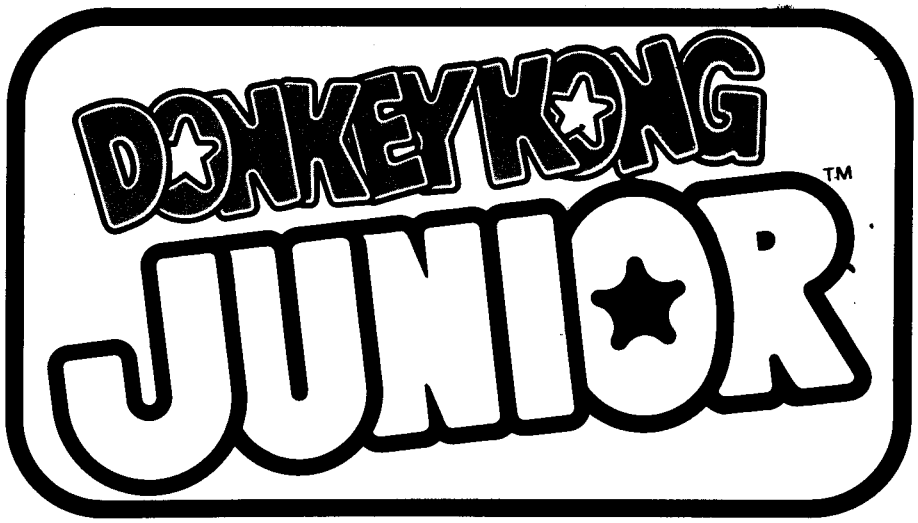

OPERATION MANUAL

MODEL NO: DJR1-UP

2 P.C.BOARDS TYPE

Nintendo™

WARNING

This equipment generates, uses and can radiate radio frequency energy and if not installed and used in accordance with the instructions manual, may cause interference to radio communications. As temporarily permitted by regulation it has not been tested for compliance with the limits for Class A computing devices pursuant to Subpart J of Part 15 of FCC Rules, which are designed to provide reasonable protection against such interference. Operation of this equipment in a residential area is likely to cause interference in which case the user at his own expense will be required to take whatever measures may be required to correct the interference.

C O N T E N T S

1. CAUTIONS 1

2. SPECIFICATIONS 2

3. INSTALLATION OF THE MACHINE

   (1) Cautions on installation 3

   (2) Earthing of machine 3

4. MAINTENANCE AND INSPECTION

   (1) Dismounting of front screen 4

   (2) Dismounting of operation panel 4

5. POINTS AND METHODS OF ADJUSTMENT

   (1) CPU P.C.Board 5

   (2) Adjustment of Semi-Fixed Resistors 6

   (3) Video Monitor 7

6. WIRING AND CONNECTION 8

7. NAME OF EACH PART

   (1) Body 9

   (2) Operation Panel Assembly 11

8. PARTS LIST 12

C A U T I O N S

1. P.C.Board should not be exposed direct to the sun. Direct sunshine is very harmful to LSI(memory element).

2. P.C.Board to be stored or transported should be wrapped by a conductive pouch or aluminum foil, because LSI and IC used in the machine are semiconductor integrated circuits of which basic element is MOS-FET.

3. When images on the Video Monitor screen are disturbed by powerful noise or other electrical causes, turn the main power off once and then on again.

2. SPECIFICATIONS

Power Consumption	:	118W
Size	:	600(W) × 850(D) × 1700(H)mm.
Weight	:	100 Kgs.
Number of Player	:	1 or 2 person(s)
Number of Junior	:	3 ~ 6 (Adjustable)
Accessories	:	Operation Manual : 1 copy
		Key for Back Door : 2 pcs.
		Key for Coin Box Door : 2 pcs.
		Fuse : 4 pcs.
		100~120V : 5A × 1, 4A × 2, 0.3A × 1
		220~240V : 4A × 2, 3A × 1, 0.3A × 1

NOTE: Specifications are subject to change for improvement without notice.

3. INSTALLATION OF THE MACHINE

3-1 Cautions on installation

(1) The power cord of the machine should not be connected to a wall outlet together with large load unit(s) such as motor, cooler,etc.

(2) Turn the power off before setting and removing the P.C. Board and connectors. Carefully handle them.

(3) Do not touch IC, LSI and other electronic parts on P.C. Board. Do not use a tester or the like on them. (They may be damaged by the inner voltage of the instruments.)

(4) When exchanging a fuse, use a new one of the prescribed capacity.

(5) The machine should be installed where it is not hot, keeping away from a heating appliance and direct sunshine.

(6) The machine should be installed where it is not wet and dusty.

(7) Do not touch the inside of the video monitor which has high tension units. Inform service station, if necessary.

3-2 Earthing of machine

(1) When the machine is installed in a wet place, it should be grounded to avoid accident by an electric shock.

a) Connect an earthing wire to the earthing terminal of the machine.

b) The opposite end of the earthing wire should be connected to an earthing bar which is firmly inserted into the ground.

(2) Cautions

a) Do not connect the earthing wire to a water pipe, because polyvinyl-choloride pipes are sometimes used in the water lines and, if so, the electronic continuity is cut at the points.

b) Do not connect the earthing wire to the gas pipe absolutely. That is very dangerous.

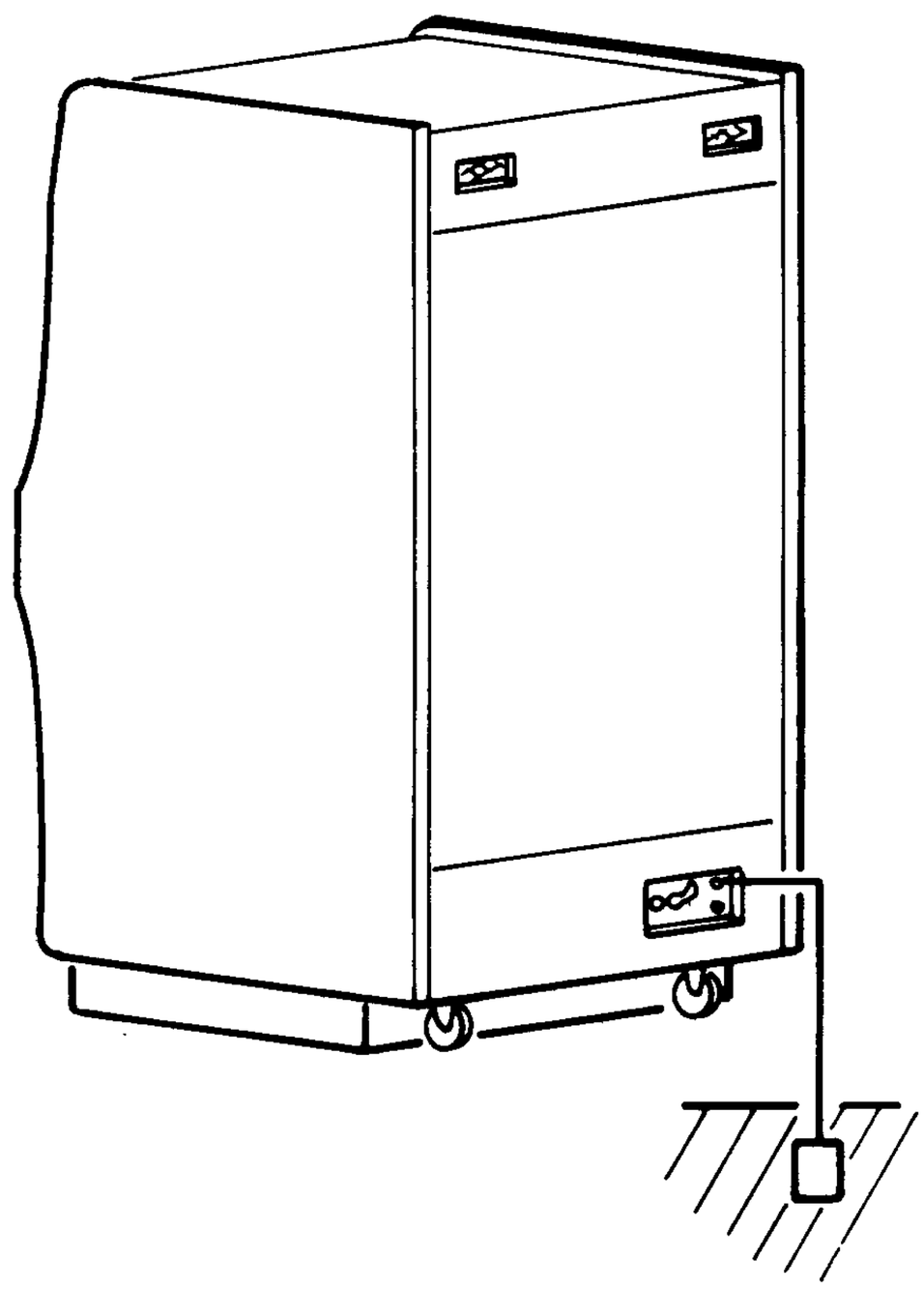

4. MAINTENANCE AND INSPECTION

4-1 Dismounting of front screen

Opening the back door, pull the front screen clamp which is mounted under the top plate. Pull the front screen upward while pushing and then pull toward you.

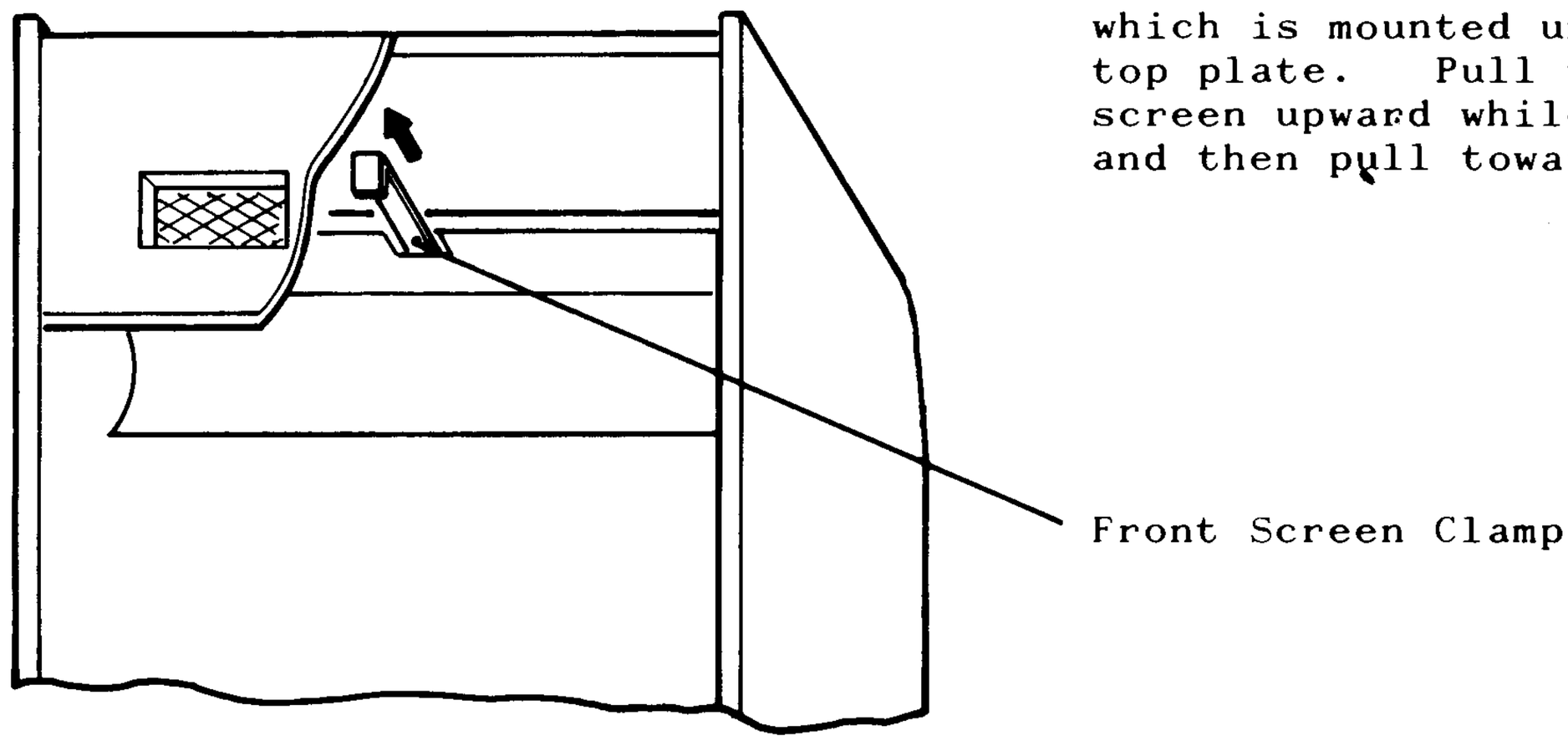

4-2 Dismounting of operation panel

To dismount the operation panel for maintenance or inspection of the Control Unit or Micro Switch, open the front door and unfasten the fastener.

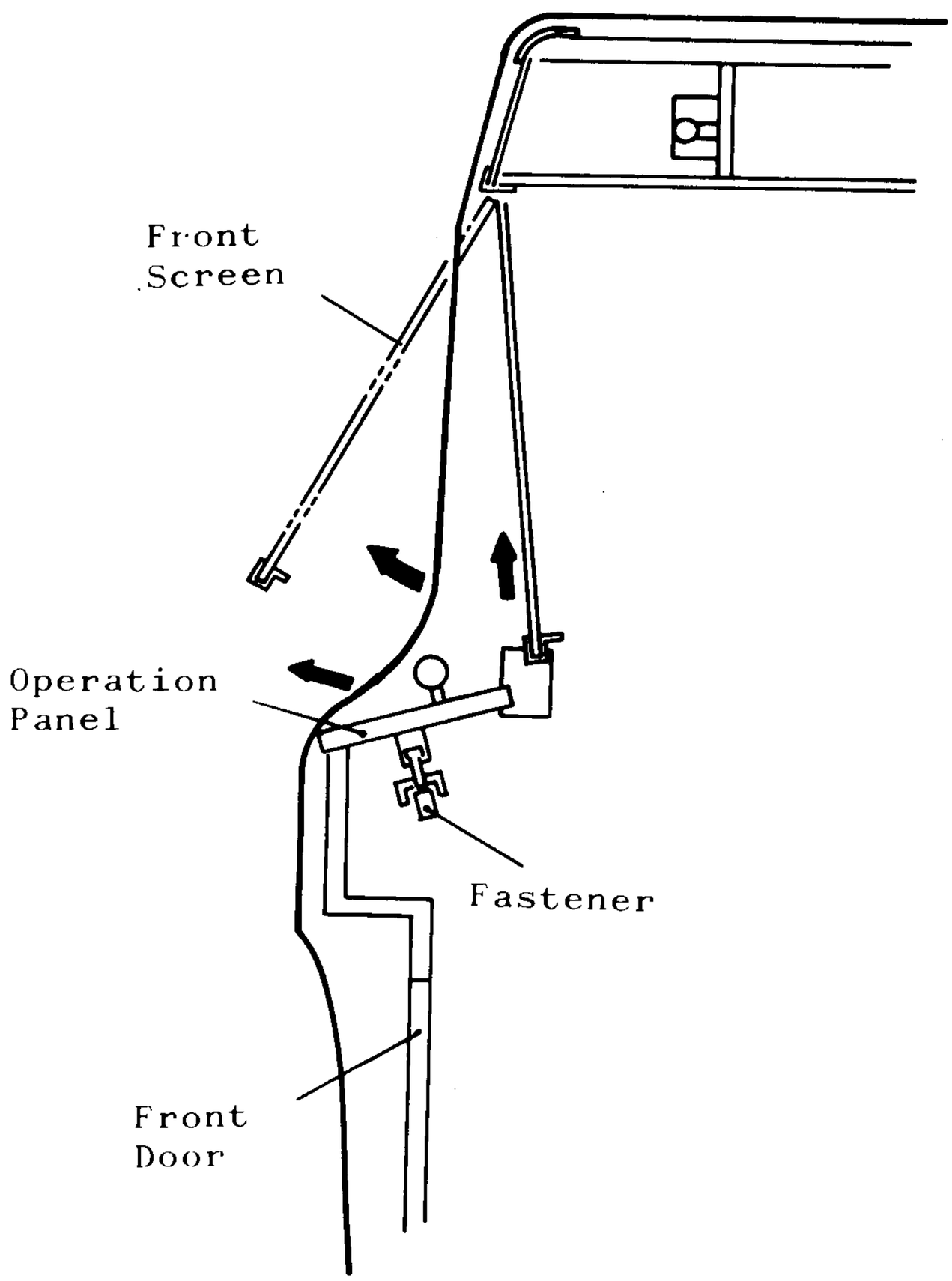

5. POINTS AND METHODS OF ADJUSTMENT

5-1 CPU P.C.Board

The number of Junior , score level, the number of coin and type of machine can be set with the switches on CPU P.C.Board according to the diagram below.

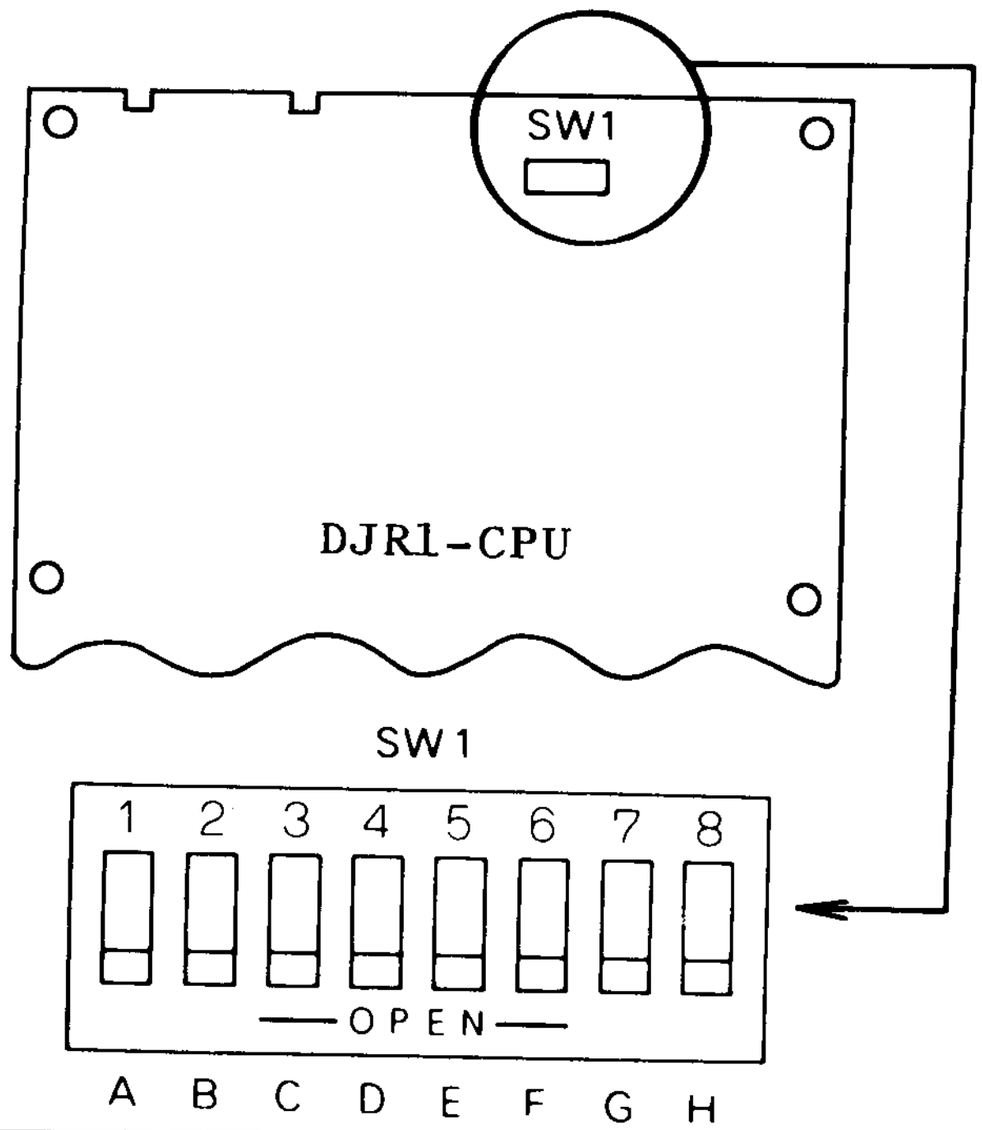

	A	B	C	D	E	F	G	H
Number of Junior								
3	OFF	OFF						
4	ON	OFF						
5	OFF	ON						
6	ON	ON						
Score Level for extra Junior								
10,000 points			OFF	OFF				
15,000 points			ON	OFF				
20,000 points			OFF	ON				
25,000 points			ON	ON				
Coinage								
1 coin /1 play					OFF	OFF	OFF	
1 coin /2 plays					OFF	ON	OFF	
1 coin /3 plays					OFF	OFF	ON	
1 coin /4 plays					OFF	ON	ON	
2 coins/1 play					ON	OFF	OFF	
3 coins/1 play					ON	ON	OFF	
4 coins/1 play					ON	OFF	ON	
5 coins/1 play					ON	ON	ON	
Table/Upright								
Table								OFF
Upright								ON

NOTE : Keep the switch H always at the ON position.

5-2 Adjustment of Semi-Fixed Resistors

VIDEO P.C. Board

Semi-fixed resistors, VR1 and VR2 on VIDEO P.C. Board are used to adjust video monitor screen.

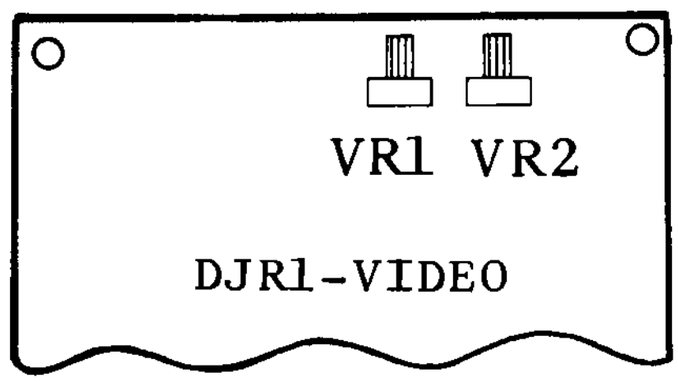

VIDEO P.C.Board

VR1	50KΩ 1/3W top type white knob	Turn right to move image downward.
VR2	50KΩ 1/3W top type white knob	Turn right to move image leftward

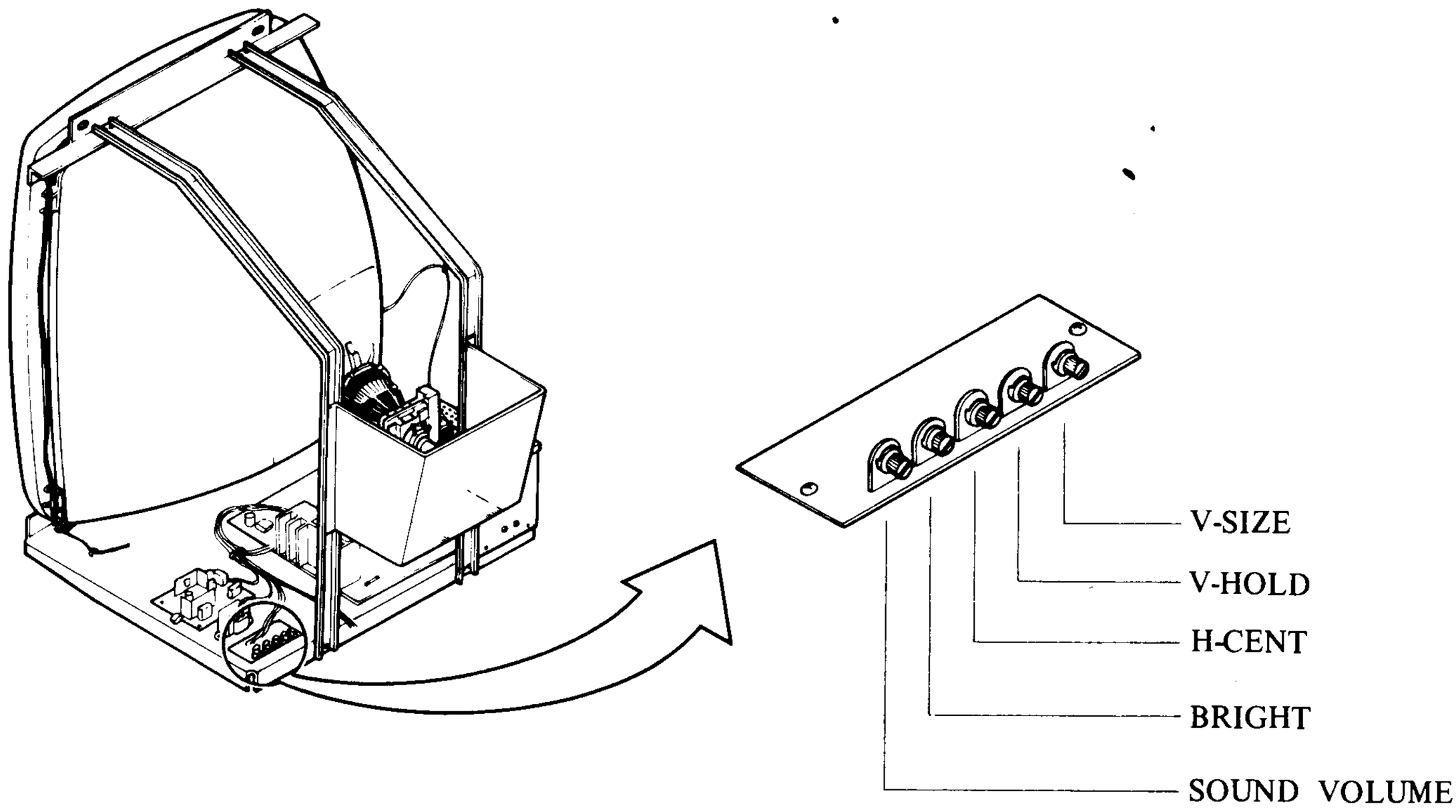

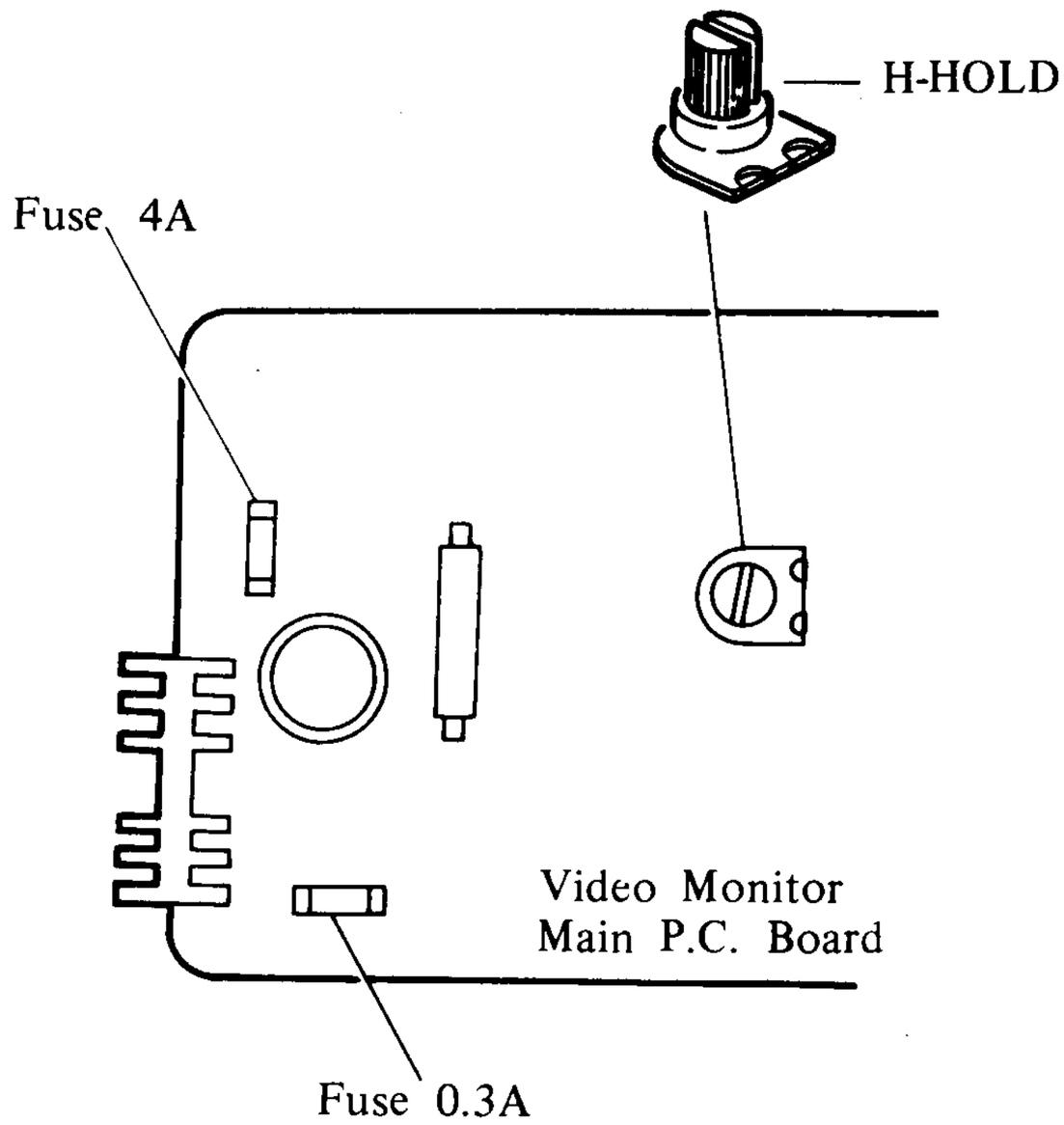

NOTE : Do not touch the inside of the Video Monitor in which many parts are supplied with high tension.

6. WIRING AND CONNECTION

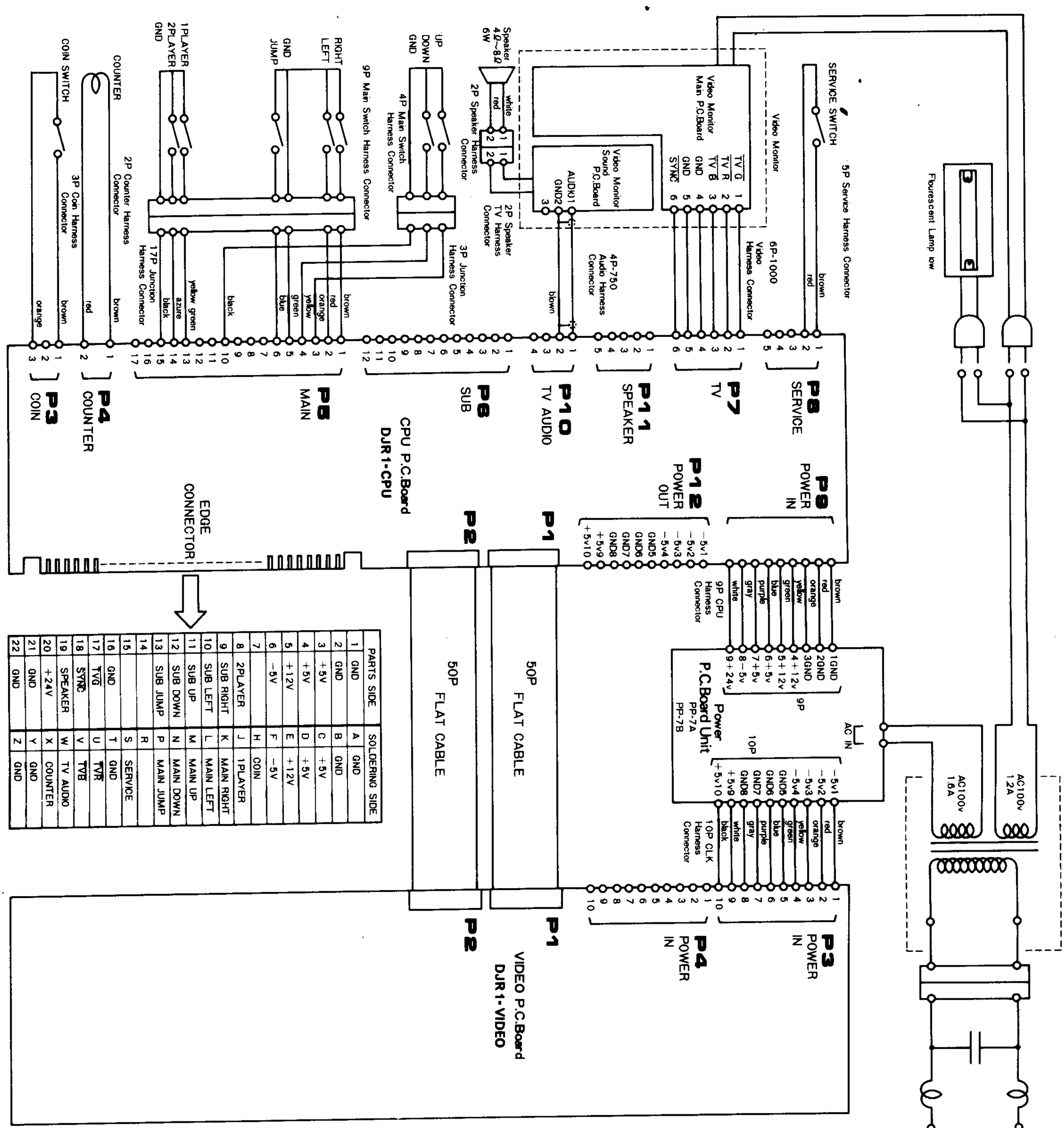

PARTS SIDE		SOLDERING SIDE	
1	GND	A	GND
2	GND	B	GND
3	+5V	C	+5V
4	+5V	D	+5V
5	+12V	E	+12V
6	−5V	F	−5V
7		H	COIN
8	2PLAYER	J	1PLAYER
9	SUB RIGHT	K	MAIN RIGHT
10	SUB LEFT	L	MAIN LEFT
11	SUB UP	M	MAIN UP
12	SUB DOWN	N	MAIN DOWN
13	SUB JUMP	P	MAIN JUMP
14		R	
15		S	SERVICE
16	GND	T	GND
17	TVG	U	TVR
18	SYNC	V	TVB
19	SPEAKER	W	TV AUDIO
20	+24V	X	COUNTER
21	GND	Y	GND
22	GND	Z	GND

7. NAME OF EACH PART

(1) Body

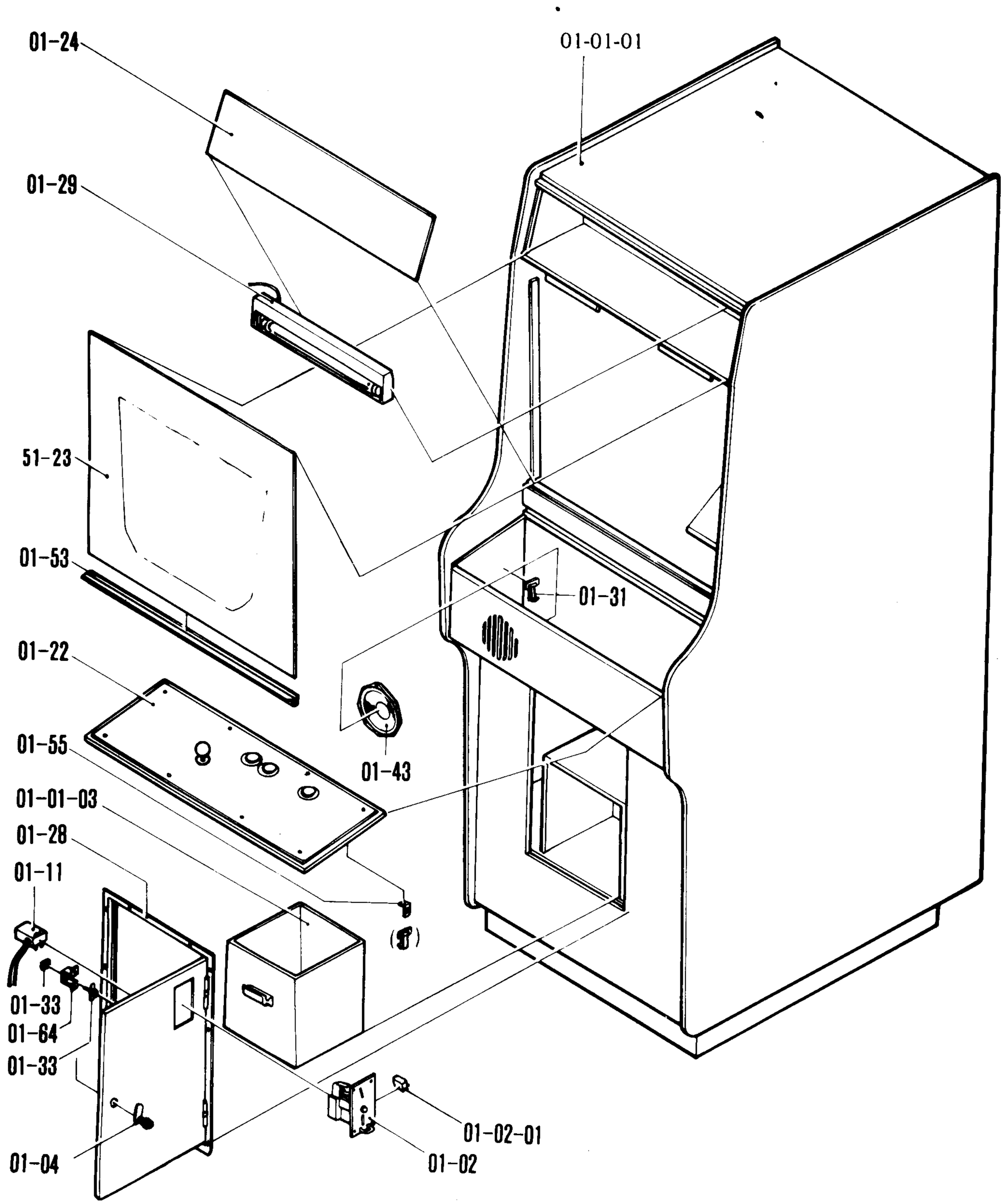

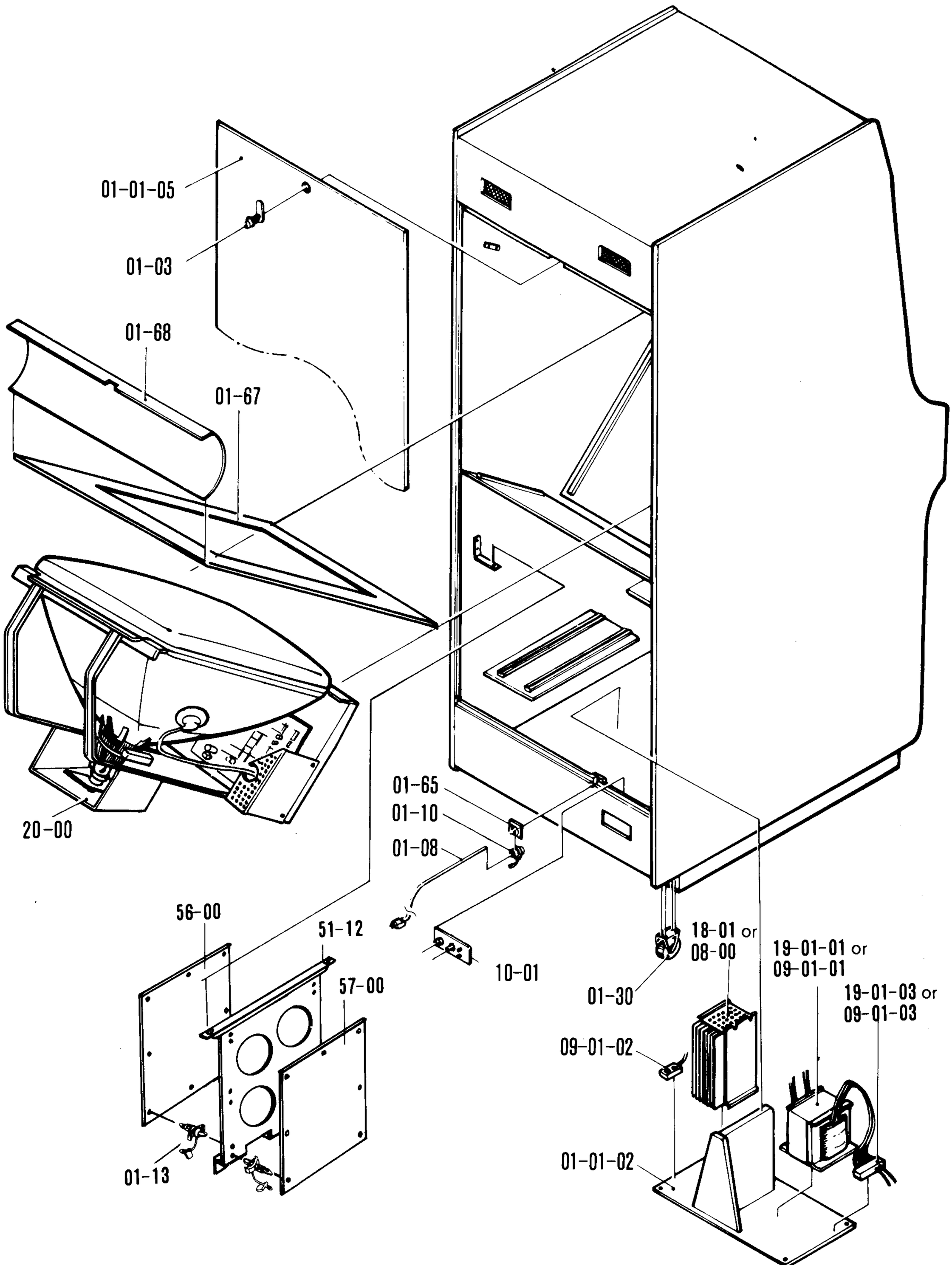
01-01-05
01-03
01-68
01-67
20-00
01-65
01-10
01-08
56-00
51-12
57-00
10-01
01-13
18-01 or
08-00
01-30
19-01-01 or
09-01-01
19-01-03 or
09-01-03
09-01-02
01-01-02

(2) Operation Panel Assembly

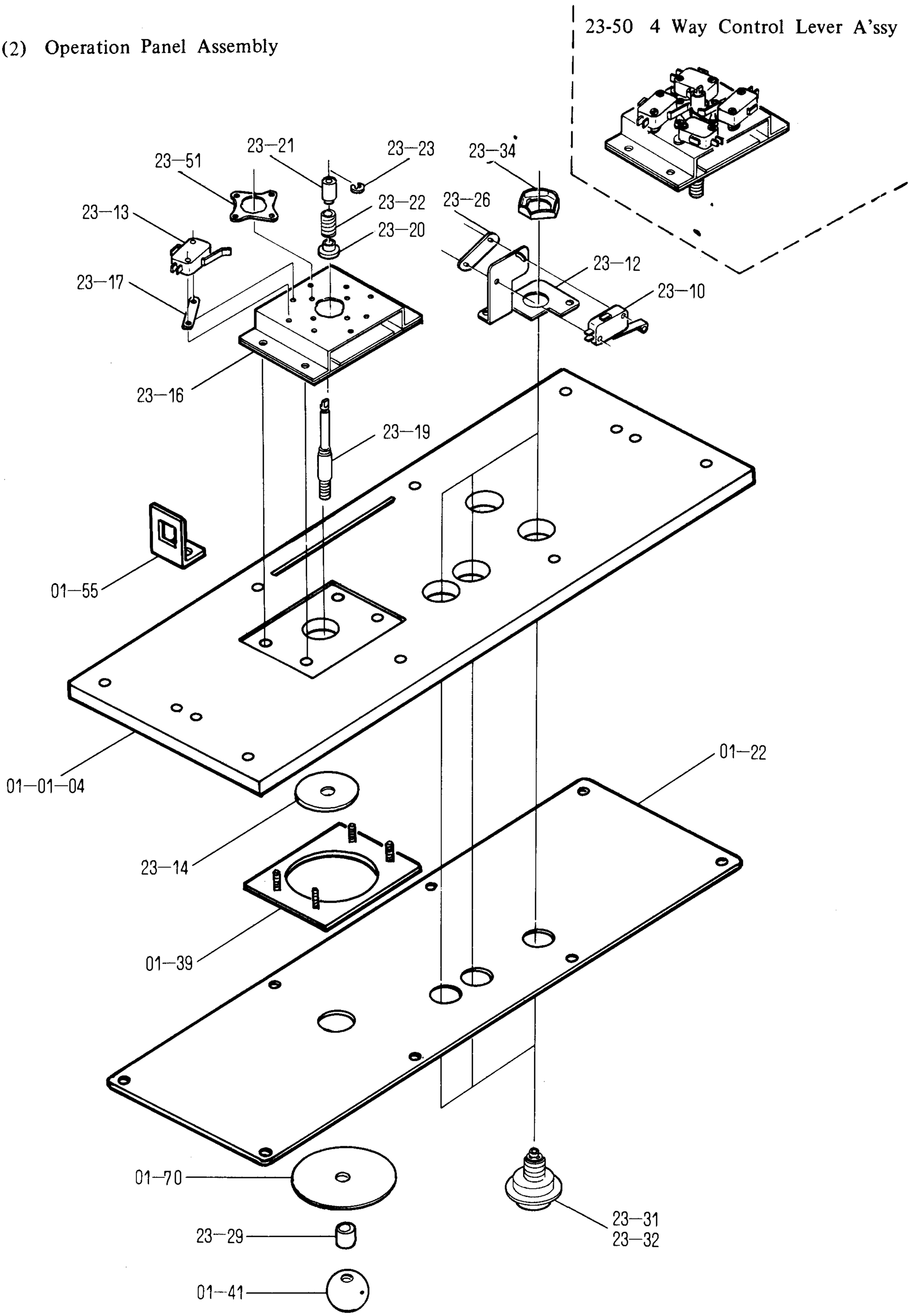

8. PARTS LIST

1. DJR-Body

No.	Name of Parts	Q'ty	Remarks	FOB Japan per pc.
DJRU-01-01-01	Body	1		
DJRU-01-01-02	Transformer Base	1		
DJRU-01-01-03	Cash Box	1		
DJRU-01-01-04	Control Lever Ass'y Base	1		
DJRU-01-01-05	Back Door	1		
DJRU-01-02	Coin Selector	1	T	
DJRU-01-02-01	Coin Switch	1	T	
DJRU-01-03	Back Door Lock	1		
DJRU-01-04	Front Door Lock	1		
DJRU-01-08	Power Cord	1		
DJRU-01-10	Strain Relief Bushing	1	T	
DJRU-01-11	Game Counter	1	T	
DJRU-51-12	TKG4 P.C.Board Mounting Bracket	1		
DJRU-01-13	P.C.Board Support	16		
DJRU-01-22	Operation Panel	1		
DJRU-51-23	Front Screen	1		
DJRU-01-24	Name Plate	1		
DJRU-01-28	Front Door Ass'y	1		
DJRU-01-29	Fluorescent Lamp Ass'y	1		
DJRU-01-30	Caster	2		
DJRU-01-31	Operation Panel Ass'y Fastener (A)	2		
DJRU-01-33	Service Switch	1	T	
DJRU-01-39	Control Lever Ass'y Mounting Plate	1		
DJRU-01-41	Control Lever Knob	1		
DJRU-01-43	Speaker	1		
DJRU-01-53	Front Screen Frame (Lower)	1		
DJRU-01-55	Operation Panel Ass'y Fastener (B)	2		
DJRU-01-64	Service Switch Bracket	1		
DJRU-01-65	Strain Relief Bushing Plate	1		
DJRU-01-67	Blind Cardboard (Large)	1		
DJRU-01-68	Blind Cardboard (Small)	1		
DJRU-01-70	Control Knob Plate	1		
DJRU-56-00	VIDEO P.C.Board	1	(DJR1-VIDEO)	
DJRU-57-00	CPU P.C.Board	1	(DJR1-CPU)	
DJRU-08-00	(PP-7A) Power P.C.Board	1	T	
DJRU-18-01	(PP-7B) Power P.C.Board	1	T	

No.	Name of Parts	Q'ty	Remarks	FOB Japan per pc.
DJRU-09-01-01	(PT-8A) Power Transformer	1		
DJRU-19-01-01	(PT-821B) Power Transformer	1		
DJRU-09-01-02	2P Table Tap	1		
DJRU-09-01-03	Terminal Block	1	(Sexipolar)	
DJRU-19-01-03	Terminal Block	1	(Quadrupolar)	
DJRU-10-01	Power Switch Ass'y	1		
DJRU-13-01	10P CLK Harness Connector	1	T	
DJRU-13-02	2P Counter Harness Connector	1		
DJRU-13-03	9P CPU Harness Connector	1	T	
DJRU-13-04	3P Coin Harness Connector	1		
DJRU-13-05	5P Service Harness Connector	1		
DJRU-13-06	2P Speaker TV Harness Connector	1		
DJRU-13-07	4P-750 Audio Harness Connector	1	T	
DJRU-13-10	9P Main Switch Harness Connector	1		
DJRU-13-11	17P Junction Harness Connector	1		
DJRU-13-12	50P Flat Cable	2	T	
DJRU-13-17	2P Speaker Harness Connector	1		
DJRU-13-28	3P Junction Harness Connector	1		
DJRU-13-29	4P Main Switch Harness Connector	1		
DJRU-13-31	6P-1000 Video Harness Connector	1		
DJRU-20-00	Video Monitor	1	(20-5F)	
DJRU-23-10	Micro Switch	3		
DJRU-23-12	Switch Button Bracket	3		
DJRU-23-13	Control Switch	4	T	
DJRU-23-14	Blind Plate	1	T	
DJRU-23-16	Bearing Bracket	1	T	
DJRU-23-17	Switch Spacer	4	T	
DJRU-23-19	Schaft	1	T	
DJRU-23-20	Spring Stopper	1	T	
DJRU-23-21	Switch Collar	1	T	
DJRU-23-22	Lever Spring	1	T	
DJRU-23-23	E Ring 4	1	T	
DJRU-23-26	Nut Plate	3		
DJRU-23-29	Control Knob Collar	1	T	
DJRU-23-31	Switch Button Ass'y (Blue)	2		
DJRU-23-32	Switch Button Ass'y (Orange)	1		
DJRU-23-34	Pal Nut	3		
DJRU-23-50	4 Way Control Lever Ass'y	1	T	
DJRU-23-51	4 Way Guide Plate	1	T	

2. VIDEO P.C.Board

No.	Name of Parts	Q'ty	Remarks	FOB Japan per pc.
DJR-56-00	VIDEO P.C.Board	1	Complete Set (TKG4-11-VIDEO)	
DJR-56-01	IC SN74LS00	2	Quadruple 2-Input Positive NAND Gates	
DJR-56-02	IC SN 74LS02	3	Quadruple 2-Input Positive Nor Gates	
DJR-56-03	IC SN74LS04	6	Hex Inverters	
DJR-56-04	IC SN74LS08	1	Quadruple 2-Input AND Gate	
DJR-56-05	IC SN74LS10	1	Tri 3 Input NAND Gate	
DJR-56-06	IC SN74LS20	4	Dual 4-Input Positive NAND Gate	
DJR-56-07	IC SN74LS30	1	8-Input Positive NAND Gate	
DJR-56-08	IC SN74LS32	1	Quadruple 2-Input Positive or Gate	
DJR-56-09	IC SN74LS74	4	Dual D-Type Edge-Triggered Flip-Flop w/Set and Reset	
DJR-56-10	IC SN74LS86	7	Quadruple 2-Input Executive OR Gate	
DJR-56-11	IC SN74LS109	1	Dual J-K Positive Edge-Triggered Flip-Flops with Preset and Clear	
DJR-56-12	IC SN74LS123	2	Dual Retriggerable Single Shot	
DJR-56-13	IC SN74LS139	1	Dual 2-to 4-Line Decoder/Demultiplexer	
DJR-56-14	IC SN74LS157	14	Quadruple 2-Line to 1-Line Data	
DJR-56-15	IC SN74LS161	4	Synchronous Presettable 4-Bit Binary Counter w/Direct Reset	
DJR-56-16	IC SN74LS163	2	4-Bit Binary Counter with Synchronous clear	
DJR-56-17	IC SN74LS174	1	Hex D-Type Flip-Flop w/Reset RAM	
DJR-56-18	IC SN74LS175	2	Quadruple D-Type Flip-Flop w/Reset	
DJR-56-19	IC-SN74LS245	2	Octal 3-State Bus Transceivers	
DJR-56-20	IC SN74LS273	4	Octal D-FFS	
DJR-56-21	IC SN74LS283	8	4 Bit Binary Full Adder	
DJR-56-22	IC SN74LS299	6	8 Bit Bidirectional Universal Shift/Storage	
DJR-56-23	IC SN74LS367	2	Hex Bus Driver w/3 State Output	
DJR-56-24	IC SN74LS373	2	Octal 3-State D-Latches	
DJR-56-25	IC SN74LS377	1	Octal D-Type Flip-Flops	
DJR-56-26	IC SN74S161	3	Schotkey 4-Bit Binary Counter with Direct Clear	
DJR-56-27	IC MB10105	1	Triple 2-3-2-Input OR/NOR Gates	
DJR-56-28	IC MB10116	1	Triple Line Receivers	
DJR-56-29	IC MB10124	4	Quadruple TTL-to-ECL Translators	
DJR-56-30	IC MB10125	3	Quadruple ECL-to-TTL Translators	
DJR-56-31	IC MB10136	1	Universal Hexadecimal Counter	
DJR-56-32	IC 2716	4	2048 x 8 Bit EP-ROM	
DJR-56-33	IC MB7074	2	ECL-RAM (MBM10422) with Radiator Fin	

No.	Name of Parts	Q'ty	Remarks	FOB Japan per pc.
DJR-56-34	IC 2732	2	4096 x 8 Bit EP-ROM	
DJR-56-35	IC MB93419	1	64 x 9 Bipolar RAM	
DJR-56-36	IC MB8114	2	1024 x 4-Bit Static MOS RAM	
DJR-56-37	IC MB8148L55	2	1024 x 4-Bit Static RAM	
DJR-56-38	IC 24S10	1	256 x 4-Bit Bipolar P-ROM	
DJR-56-39	Resistor Array	4	RNSA-09P-551J 8-device 510Ω	
DJR-56-40	Resistor Array	1	RNSA-09P-102J 8-device 1kΩ	
DJR-56-41	Variable Resistor	2	50kΩ 1/3W	
DJR-56-42	Resistor (Carbon)	2	10kΩ 1/4W ± 5%	
DJR-56-43	Resistor (Carbon)	12	510Ω 1/4W ± 5%	
DJR-56-44	Resistor (Carbon)	2	15kΩ 1/4W ± 5%	
DJR-56-45	Resistor (Carbon)	4	2.2kΩ 1/4W ± 5%	
DJR-56-46	Resistor (Carbon)	2	4.7kΩ 1/4W ± 5%	
DJR-56-47	Resistor (Carbon)	1	22kΩ 1/4W± 5%	
DJR-56-48	Resistor (Carbon)	1	27kΩ 1/4W ± 5%	
DJR-56-49	Resistor (Carbon)	24	1kΩ 1/4W ± 5%	
DJR-56-50	Electrolytic Capacitor	2	220μF 16V	
DJR-56-51	Electrolytic Capacitor	2	1μF 50V	
DJR-56-52	Ceramic Capacitor	1	47pF 50V	
DJR-56-53	Ceramic Capacitor	128	0.01μF 50V	
DJR-56-54	Ceramic Capacitor	1	33pF 50V	
DJR-56-55	Ceramic Capacitor	2	10pF 50V	
DJR-56-56	Ceramic Capacitor	4	220pF 50V	
DJR-56-57	Ceramic Capacitor	2	68pF 50V	
DJR-56-58	Ceramic Capacitor	1	330pF 50V	
DJR-56-60	Polyester Film Capacitor	1	1000pF 50V (102kz)	
DJR-56-61	Polyester Film Capacitor	1	0.1μF 50V	
DJR-56-62	Polyester Film Capacitor	1	0.022μF 50V	
DJR-56-63	Transistor	2	2SC1215-R/S/T	
DJR-56-64	Crystal Oscillator	1	61.44MHz (HC-18U)	

3. CPU P.C.Board

No.	Name of Parts	Q'ty	Remarks	FOB Japan per pc.
DJR-57-00	CPU P.C.Board	1	Complete Set (TKG4-11-CPU)	
DJR-57-01	IC SN74LS00	2	Quadruple 2-Input Positive NAND Gates	
DJR-57-02	IC SN74LS02	2	Quadruple 2-Input Positive NOR Gate	
DJR-57-03	IC SN74LS04	6	Hex Inverters	
DJR-57-04	IC SN74LS08	1	Quadruple 2-Input AND Gates	
DJR-57-05	IC SN74LS32	1	Quadruple 2-Input Positive OR Gate	
DJR-57-06	IC SN74LS74	2	Dual D-Type Edge-Triggered Flip-Flop w/Set and Reset	
DJR-57-07	IC SN74LS86	1	Quadruple 2-Input Exclusive OR Gate	
DJR-57-08	IC SN74LS123	4	Dual Retriggerable Single Shot	
DJR-57-09	IC SN74LS125	1	Quadruple 3 State Bus Buffers	
DJR-57-10	IC SN74LS132	1	Quadruple 2-Input NAND Schmit Triggers	
DJR-57-11	IC SN74LS138	5	3-to-8-Line Decoder/Demultiplexer	
DJR-57-12	IC SN74LS139	1	Dual 2-to-4-Line Decoder/Demultiplexer	
DJR-57-13	IC SN74LS157	1	2-to-1-Line Data Selectors/Multiplexers	
DJR-57-14	IC SN74LS164	2	8-Bit Serial-In Parallel-Out Shift Register	
DJR-57-15	IC SN74LS174	3	Hex D-Type Flip-Flop	
DJR-57-17	IC SN74LS240	4	Octal Buffer/Line Driver/Line Receiver w/3-State	
DJR-57-18	IC SN74LS245	1	Octal 3-State Bus Transceivers	
DJR-57-19	IC SN74LS259	3	8-Bit Addressable Latches	
DJR-57-20	IC SN74LS367	6	Hex Bus Driver w/3 State Output	
DJR-57-21	IC SN74LS373	3	Octal 3-State D-latches	
DJR-57-22	IC SN74LS629	3	Voltage Control Oscillators	
DJR-57-23	IC MB8114	6	1024 x 4-Bit Static MOS RAM	
DJR-57-24	IC 2764	3	8192 x 8-Bit EP ROM	
DJR-57-25	IC Z80A	1	8-Bit Microprocessor	
DJR-57-26	IC 24S10	2	Bipolar ROM 256 x 4-Bit	
DJR-57-27	IC 8257-5	1	DMA Controller	
DJR-57-28	IC 2732	1	4096 x 8-Bit EP ROM	
DJR-57-29	IC MB8884	1	8-Bit Microprocessor	
DJR-57-30	IC MB3614	1	Lower Power Quadruple Operational Amplifiers	
DJR-57-31	IC 3192	1	Custom	
DJR-57-32	IC DAC08CQ	1	8-Bit Digital-to-Analog Converter	
DJR-57-33	IC CD4020B	1	14-Stage Binary Ripple Counter	

No.	Name of Parts	Q'ty	Remarks	FOB Japan per pc.
DJR-57-34	Transistor	4	2SC1815	
DJR-57-35	Transistor	1	2SC1384-R	
DJR-57-36	Transistor	4	2SC828-P/Q	
DJR-57-37	Transistor	2	2SA564-P/Q/R	
DJR-57-38	Diode	10	IS953	
DJR-57-39	Diode	1	W03B	
DJR-57-40	Dip Switch	1	B-8A	
DJR-57-41	Aluminium Electrolytic Capacitor	2	470μF 16V	
DJR-57-42	Electrolytic Capacitor	1	220μF 16V	
DJR-57-43	Electrolytic Capacitor	1	33μF 16V	
DJR-57-44	Electrolytic Capacitor	3	1μF 50V	
DJR-57-45	Electrolytic Capacitor	1	4.7μF 50V	
DJR-57-46	Electrolytic Capacitor	2	3.3μF 50V	
DJR-57-47	Electrolytic Capacitor	15	10μF 16V	
DJR-57-48	Electrolytic Capacitor	2	100μF 16V	
DJR-57-49	Electrolytic Capacitor	3	47μF 16V	
DJR-57-50	Ceramic Capacitor	3	0.068μF 25V	
DJR-57-51	Ceramic Capacitor	82	0.01μF 50V	
DJR-57-52	Ceramic Capacitor	1	0.022μF 25V	
DJR-57-53	Ceramic Dapacitor	2	22pF 50V	
DJR-57-54	Ceramic Capacitor	2	0.47μF 50V	
DJR-57-56	Polyester Film Capacitor	1	0.01μF 50V	
DJR-57-57	Polyester Film Capacitor	1	0.22μF 50V	
DJR-57-58	Polyester Film Capacitor	1	0.022μF 50V	
DJR-57-59	Polyester Film Capacitor	1	0.0047μF 50V	
DJR-57-60	Polyester Film Capacitor	2	0.12μF 50V	
DJR-57-61	Polyester Film Capacitor	1	0.056μF 50V	
DJR-57-62	Tantalum Capacitor	3	10μF 16V	
DJR-57-63	Tantalum Capacitor	1	4.7μF 16V	
DJR-57-64	Tantalum Capacitor	2	22μF 16V	
DJR-57-65	Series Resistor Array	3	1kΩ PNSA-09P-102J	
DJR-57-66	Parallel Resistor Array	6	68Ω PNSB-08P-680J	
DJR-57-67	Series Resistor Array	1	4.7kΩ PNSB-09P-472J	
DJR-57-68	Resistor (Carbon)	6	47kΩ 1/4W ±5%	
DJR-57-69	Resistor (Carbon)	1	2kΩ 1/4W ±5%	
DJR-57-70	Resistor (Carbon)	6	4.7kΩ 1/4W ±5%	
DJR-57-71	Resistor (Carbon)	9	10kΩ 1/4W ±5%	
DJR-57-72	Resistor (Carbon)	7	100kΩ 1/4W ±5%	
DJR-57-73	Resistor (Carbon)	15	1kΩ 1/4W ±5%	
DJR-57-74	Resistor (Carbon)	2	5.6kΩ 1/4W ±5%	

No.	Name of Parts	Q'ty	Remarks	FOB Japan per pc.
DJR-57-75	Resistor (Carbon)	1	120Ω 1/4W ±5%	
DJR-57-76	Resistor (Carbon)	1	150Ω 1/4W ±5%	
DJR-57-77	Resistor (Carbon)	2	20KΩ 1/4W ±5%	
DJR-57-78	Resistor (Carbon)	1	150KΩ 1/4W ±5%	
DJR-57-79	Resistor (Carbon)	1	30KΩ 1/4W ±5%	
DJR-57-80	Resistor (Carbon)	1	43KΩ 1/4W ±5%	
DJR-57-81	Resistor (Carbon)	1	13KΩ 1/4W ±5%	
DJR-57-83	Resistor (Carbon)	5	68Ω 1/4W ±5%	
DJR-57-84	Resistor (Carbon)	7	330Ω 1/4W ±5%	
DJR-57-85	Resistor (Carbon)	2	33kΩ 1/4W ±5%	
DJR-57-86	Resistor (Carbon)	4	220Ω 1/4W ±5%	
DJR-57-87	Resistor (Carbon)	5	470Ω 1/4W ±5%	
DJR-57-88	Resistor (Carbon)	1	680Ω 1/4W ±5%	
DJR-57-89	Resistor (Carbon)	4	100Ω 1/4W ±5%	
DJR-57-90	Resistor (Carbon)	1	200Ω 1/4W ±5%	
DJR-57-91	Crystal Oscillator	1	HC-18U-182 (6.000MHz)	

4. Power P.C.Board

No.	Name of Parts	Q'ty	Remarks	FOB Japan per pc.
DJR-18-01	(PP-7B) Power P.C.Board	1	Complete Set	
DJR-18-02	Transistor	1	2SC2555	
DJR-18-03	Transistor	2	2SA817	
DJR-18-04	Transistor	1	2SC2535	
DJR-18-05	Transistor	1	2SA1015	
DJR-18-06	Fast Recovery Center Tap Diode	1	CTU-2S	
DJR-18-07	Shot Key Diode	2	CTB33S	
DJR-18-08	Silicon Rectifier Diode	1	S4VB40 4A 400VW	
DJR-18-09	Silicon Rectifier Diode	1	1B4B41	
DJR-18-10	Hybrid IC	2	3D-1001	
DJR-18-11	3 Terminals Regulators	1	7824	
DJR-18-12	3 Terminals Regulators	1	7812	
DJR-18-13	Thyristors	1	5P4M	
DJR-18-14	Thyristors	1	03P05M	
DJR-18-15	Diode	4	1S954	
DJR-18-16	Diode	4	10DF-4	
DJR-18-17	Photo Coupler	1	PC614	
DJR-18-18	Zener Diode	1	05Z5.6U	
DJR-18-19	Zener Diode	1	05Z5.1L	
DJR-18-20	Zener Diode	1	05Z5.6Z	
DJR-18-21	Ceramic Capacitor	3	DE0707B471K2K 470pF2KV	
DJR-18-22	Ceramic Capacitor	1	0.1MF 50V	
DJR-18-23	Film Capacitor	3	MDD2J473M 0.047MF 630VW	
DJR-18-24	Film Capacitor	2	0.01MF 50V	
DJR-18-25	Film Capacitor	2	1000pF 50V	
DJR-18-26	Aluminum Electrolytic Capacitor	1	1000MF 50V	
DJR-18-27	Aluminum Electrolytic Capacitor	2	47MF 35V	
DJR-18-28	Aluminum Electrolytic Capacitor	7	47MF 16V	
DJR-18-29	Aluminum Electrolytic Capacitor	4	3300MF 10V	
DJR-18-30	Aluminum Electrolytic Capacitor	2	100MF 25V	
DJR-18-31	Aluminum Electrolytic Capacitor	5	10MF 16V	
DJR-18-32	Aluminum Electrolytic Capacitor	2	330MF 200V	
DJR-18-33	Aluminum Electrolytic Capacitor	1	1000MF 25V	
DJR-18-34	Resistor (Coil Winding)	1	20 OHM 2W	
DJR-18-35	Resistor (Carbon)	5	1K OHM ¼W±5%	
DJR-18-36	Resistor (Carbon)	8	51 OHM ¼W±5%	
DJR-18-37	Resistor (Carbon)	6	12 OHM ½W±5%	
DJR-18-38	Resistor (Carbon)	1	470 OHM ¼W±5%	
DJR-18-39	Resistor (Carbon)	1	22 OHM ½W±5%	
DJR-18-40	Resistor (Carbon)	2	20K OHM ½W±5%	

No.	Name of Parts	Q'ty	Remarks	FOB Japan per pc.
DJR-18-41	Resistor (Carbon)	1	100 OHM ½W	
DJR-18-42	Resistor (Cement)	1	20 OHM 5W	
DJR-18-43	Resistor (Metal Oxide)	1	510 OHM 3W	
DJR-18-44	Variable Resistor	2	50K OHM GF06P	
DJR-18-45	Variable Resistor	2	2K OHM GF06P	
DJR-18-46	Shunt Resistor	2	5m OHM	
DJR-18-47	SC Coil	1	SC-02	
DJR-18-48	SF Coil	2	100MH 5A	
DJR-18-49	SF Coil	2	800MH 2A	
DJR-18-50	Oscillator Transformer	1	EC-35 Type 3D-0097	
DJR-18-51	Oscillator Transformer	1	EI-30 Type 3D-0097	
DJR-18-52	Oscillator Transformer	2	EE-16 Type 3D-1000	
DJR-18-53	Fuse Element	1	FGMB 4A 125V NR Type	

PRINTED IN JAPAN

©1982 Nintendo of America Inc.

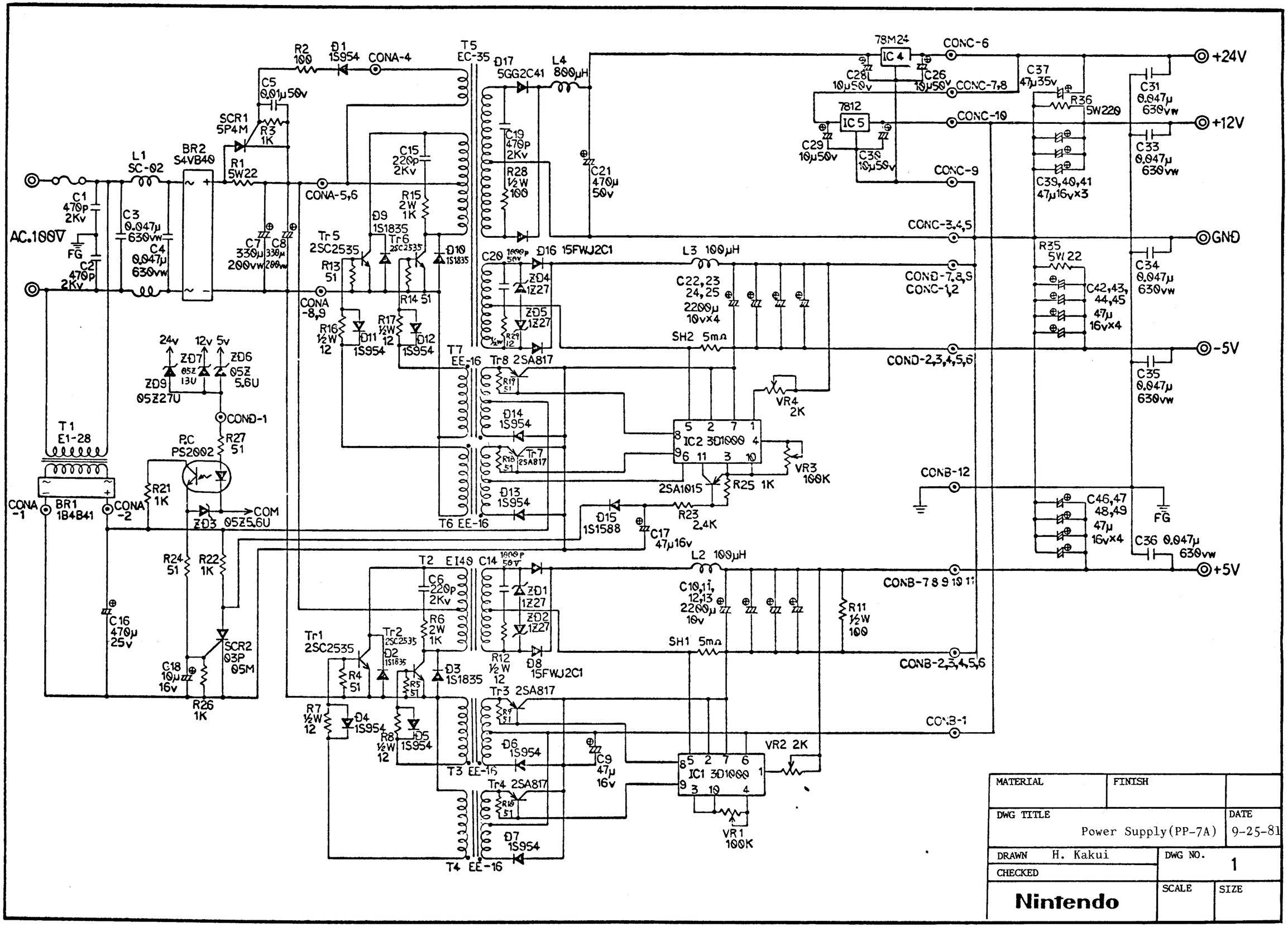

MATERIAL	FINISH	
DWG TITLE Power Supply(PP-7A)		DATE 9-25-81
DRAWN H. Kakui	DWG NO. 1	
CHECKED		
Nintendo	SCALE	SIZE

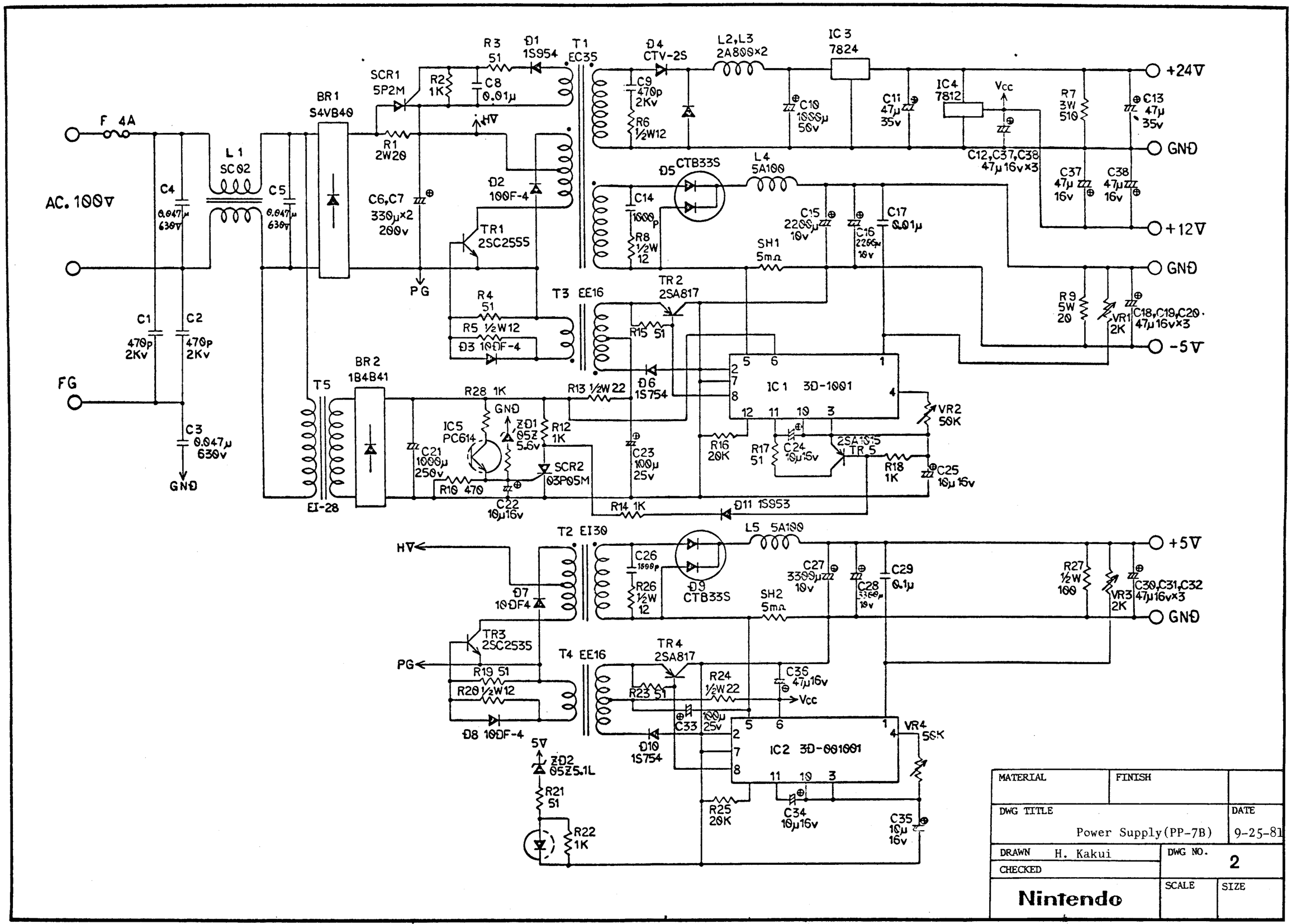

MATERIAL	FINISH	
DWG TITLE: Power Supply(PP-7B)		DATE: 9-25-81
DRAWN: H. Kakui	DWG NO. 2	
CHECKED		
Nintendo	SCALE	SIZE

20-EZV(R-B)

NOTE
1. Every resistors without value descriptions are 1/4W
2. Bearable voltage of capacitors are 50V
3. Diodes without descriptions of variation are 1S1555 or 1S2706 or 1S2473 or DS442

Resistors

Ex. : 2 F P J Rank of Accuracy(*List 1)
Figure
Variations(*List 2)
Value(W)

List 1.

Mark	F	G	J	K
Rank	±1%	±2%	±5%	±10%

List 2.

Mark	F	N	R	C	Y
Variation	Carbon	Metal	Metal Oxide	Solid	Coil Winding

List 3.

Mark	C	EE	F	N
Variation	Ceramic	Electrolytic	Poly-ester	Polypro-pyleine

Capacitor

Ex. : 160 EE M- Rank of Acc
Variation(
Bearable Vo

List 4.

Mark	J	K	M	N
Rank	±5%	±10%	±20%	±30%

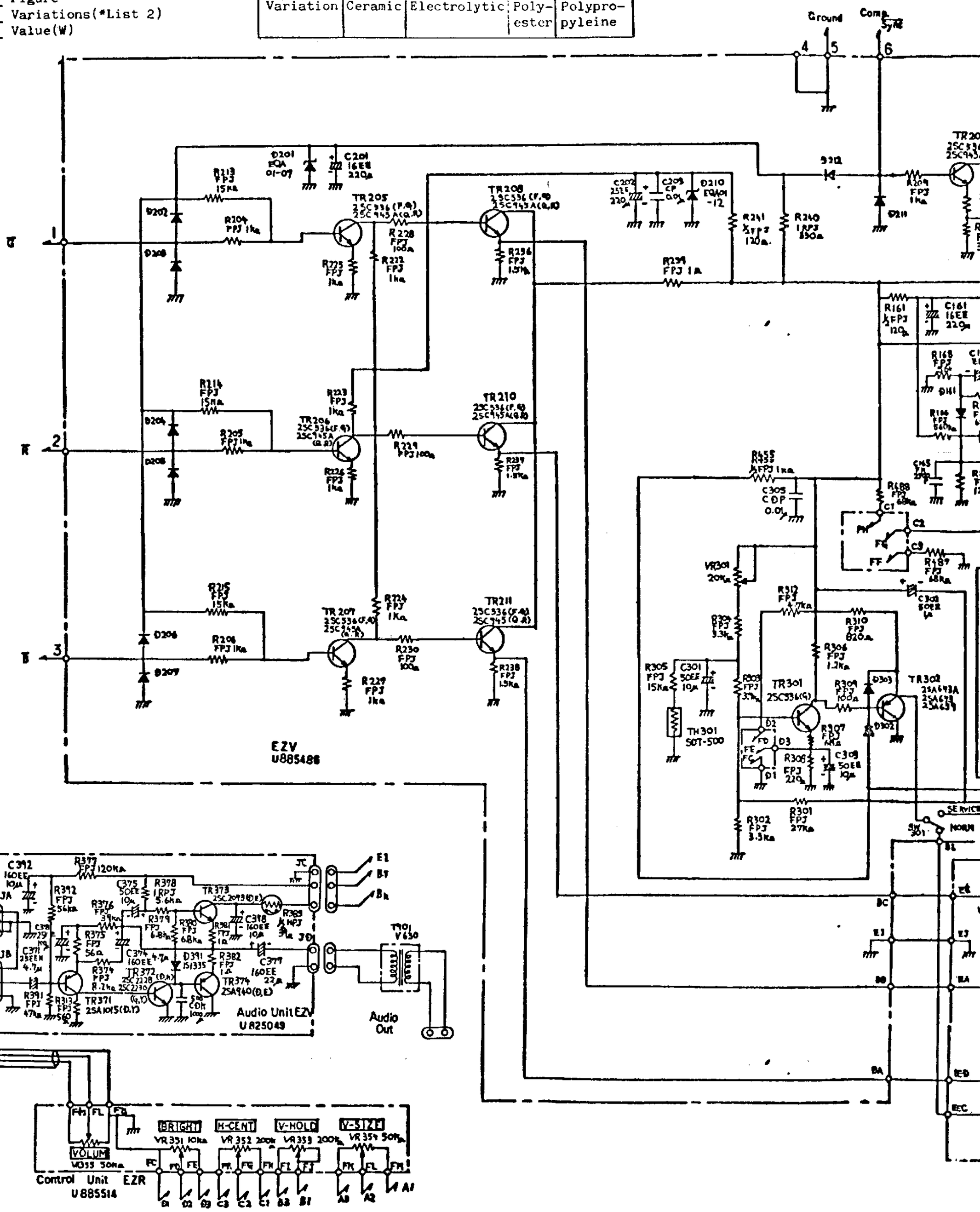

Rank of Accuracy (List 4)
Variation(List 3)
Bearable Voltage

M	N
±20%	±30%

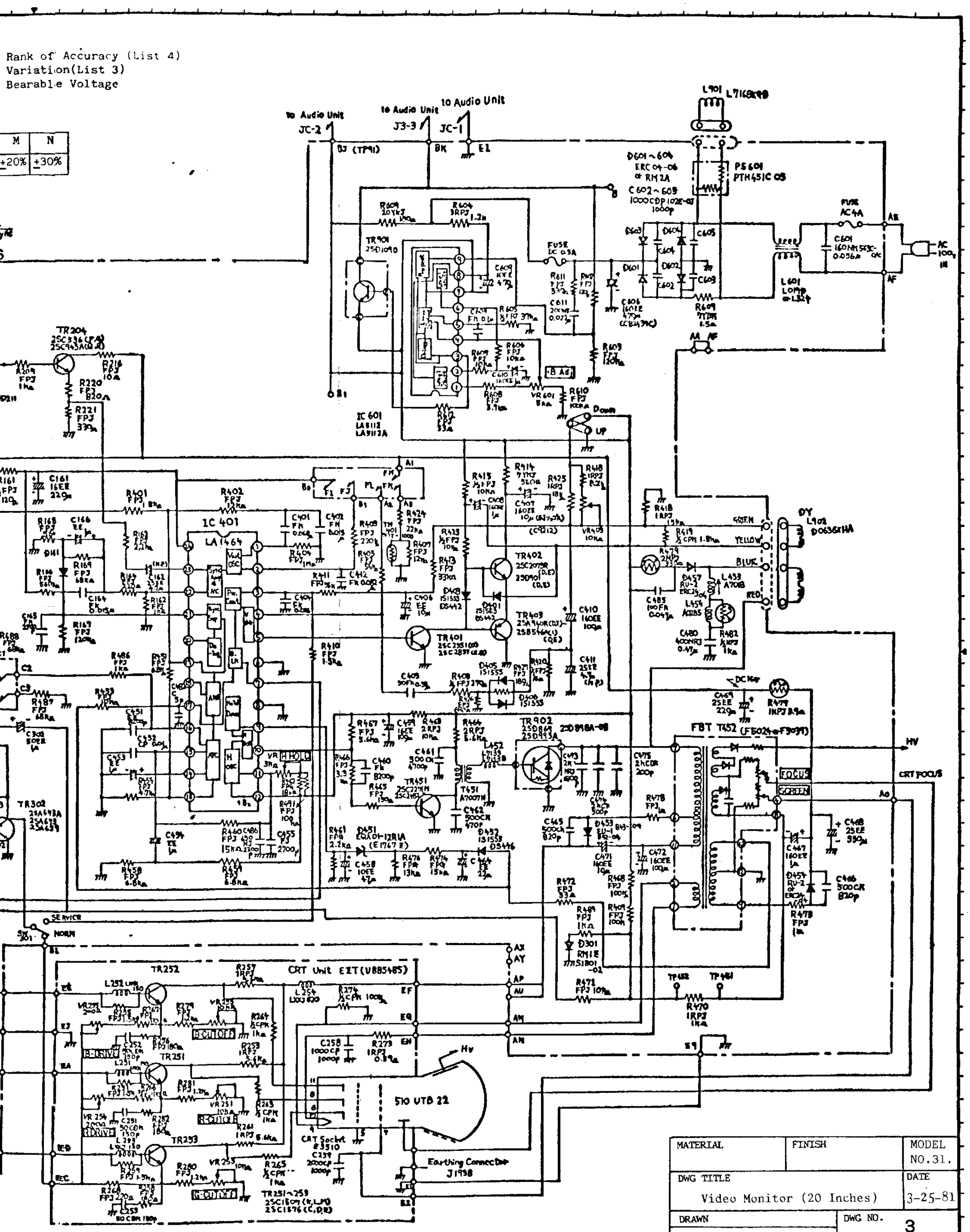

MATERIAL	FINISH	MODEL NO.31.
DWG TITLE: Video Monitor (20 Inches)		DATE: 3-25-81
DRAWN	DWG NO. 3	
CHECKED		
Nintendo	SCALE	SIZE

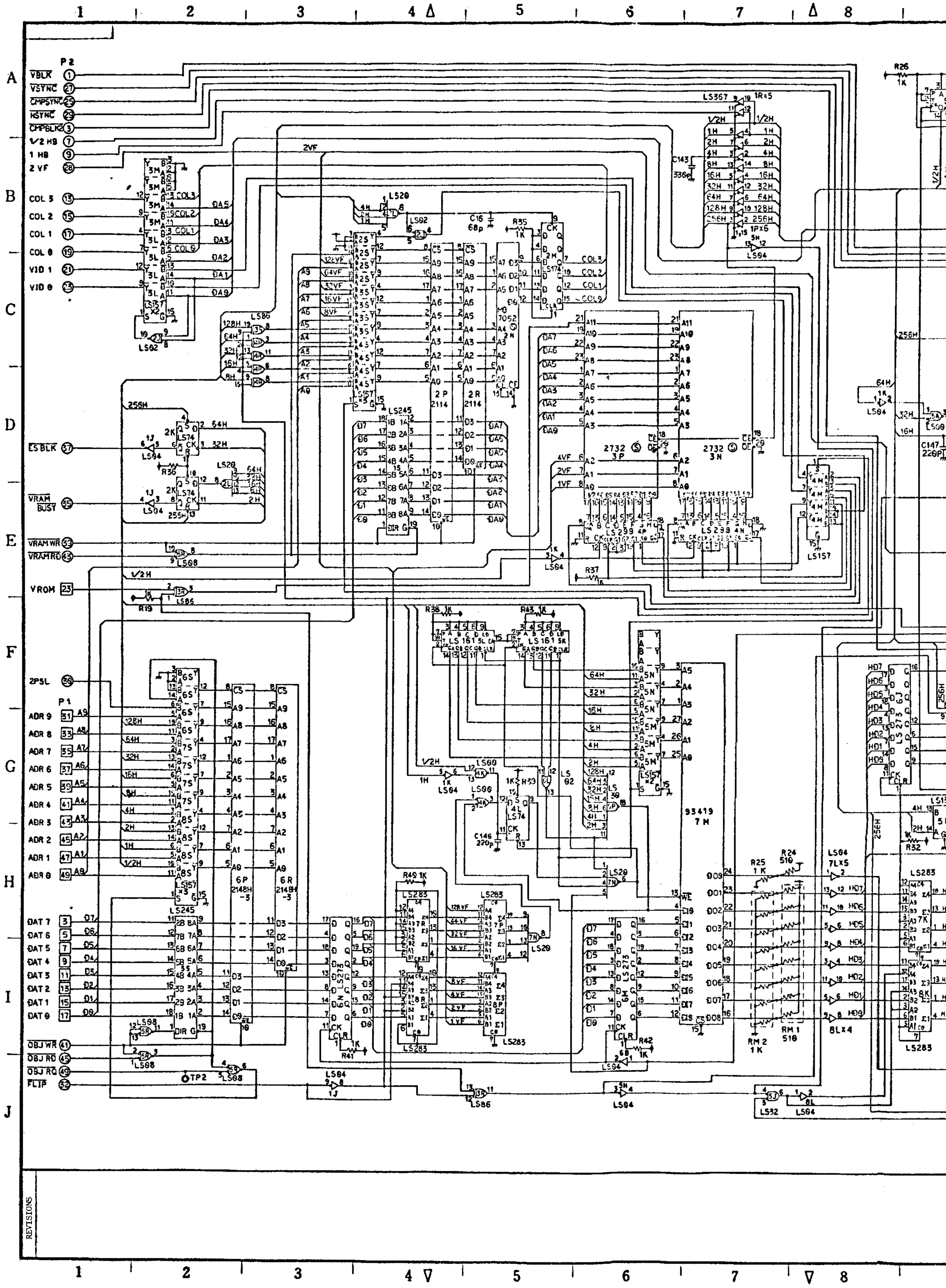
P2
VBLK
VSYNC
CMPSYNC
HSYNC
CMPBLK
1/2 HB
1 HB
2 VF
COL 3
COL 2
COL 1
COL 0
VID 1
VID 0
ES BLK
VRAM BUSY
VRAM WR
VRAM RD
VROM
2PSL
P1
ADR 9
ADR 8
ADR 7
ADR 6
ADR 5
ADR 4
ADR 3
ADR 2
ADR 1
ADR 0
DAT 7
DAT 6
DAT 5
DAT 4
DAT 3
DAT 2
DAT 1
DAT 0
OBJ WR
OBJ RD
OBJ RQ
FLIP
LS367
LS174
LS157
LS245
LS283
LS273
LS161
LS299
2732
93419
LS04
LS08
LS86
LS32
LS00
LS20
LS02
LS74
LS283
TP2
REVISIONS

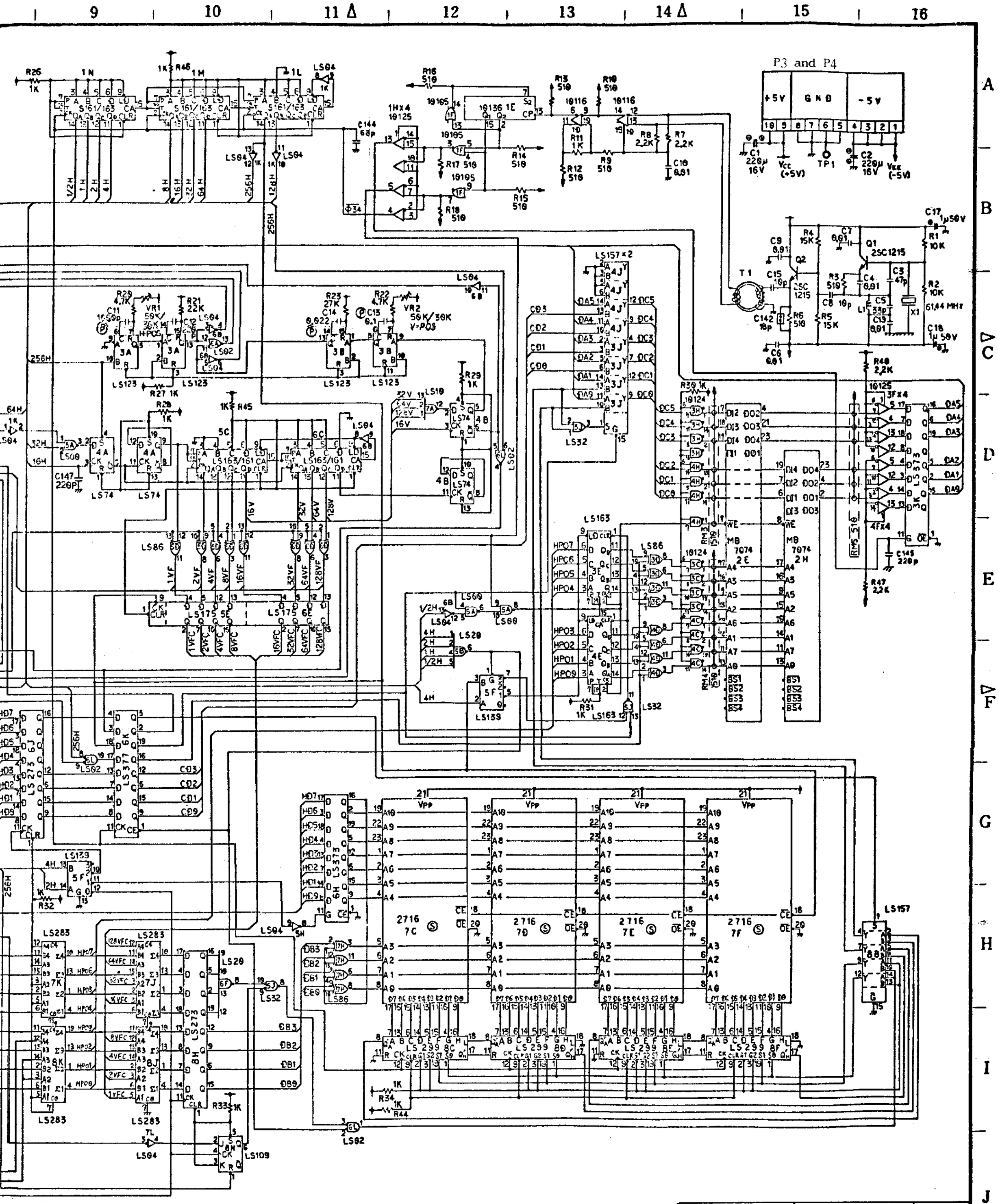

MATERIAL	FINISH	
DWG TITLE	Donkey Kong Junior Video P.C. Board	DATE 5-19-82
DRAWN O. Komori		DWG NO. 4
CHECKED		
Nintendo	SCALE	SIZE

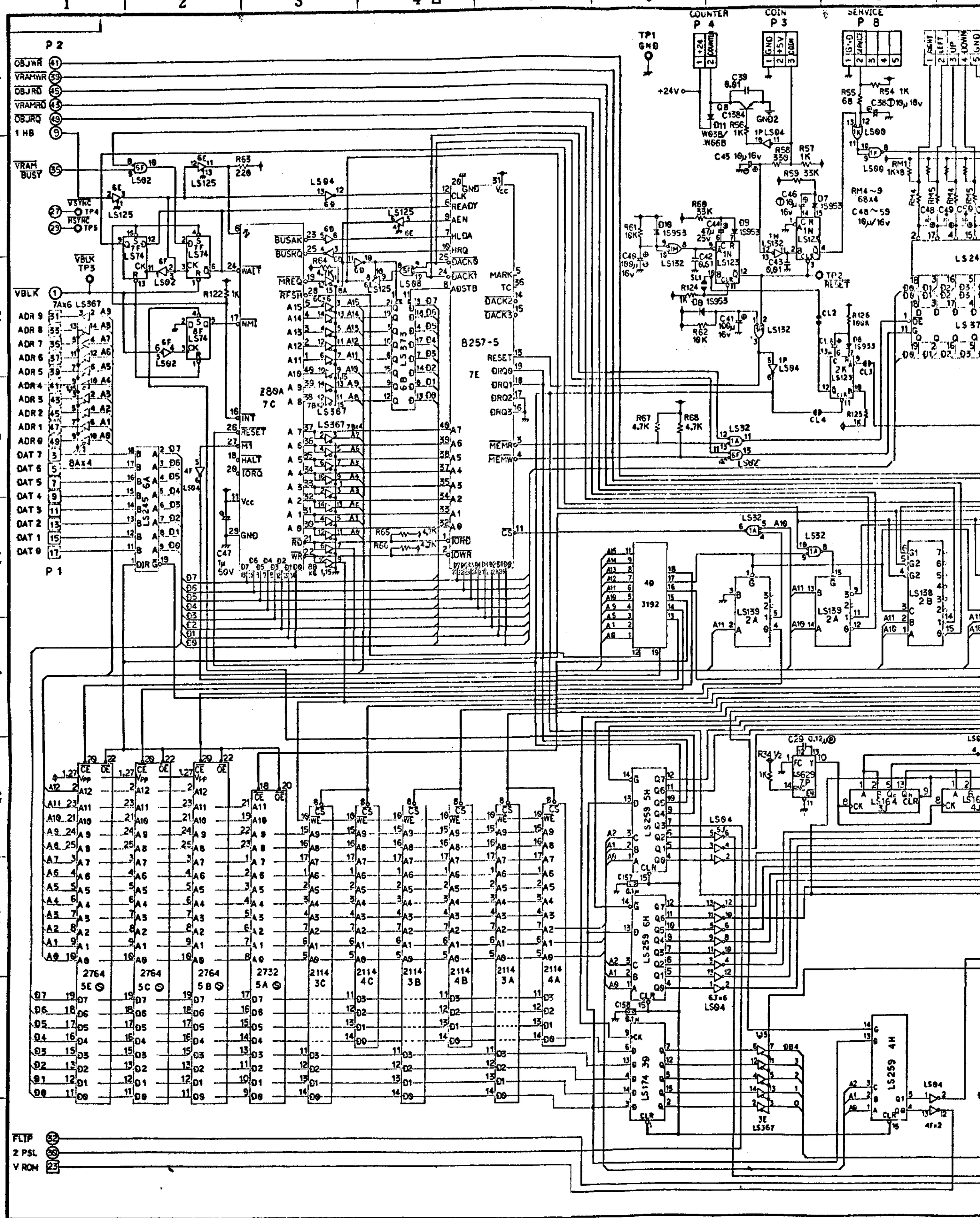
P 2
P 1
P 4
COUNTER
P 3
COIN
P 8
SERVICE
TP1 GND
+24V
Z80A 7C
8257-5 7E
LS367
LS245 6A
LS74
LS125
LS02
LS04
LS08
LS32
LS139 2A
LS138 2B
LS259 5H
LS259 6H
LS174 3D
LS259 4H
LS629 7P
LS164
2764 5E
2764 5C
2764 5B
2732 5A
2114 3C
2114 4C
2114 3B
2114 4B
2114 3A
2114 4A
3192
FLIP
2 PSL
V ROM
NOTE 1: EDGE CONNECTOR PIN ARRANGEMENT
PARTS-SIDE
1 GND
2 GND
3 +5V
4 +5V
5 +12V
6 -5V
7
8 2 PLAY
9 2P RIGHT
10 2P LEFT
11 2P UP
12 2P DOWN
13 2P JUMP
14
15
16 VIDEO GND
17 GREEN
18 SYNC
19 SPEAKER
20 +24V
21 GND
22 GND
SOLDERED-SIDE
A GND
B GND
C +5V
D +5V
E +12V
F -5V
H COIN
J 1 PLAY
K 1P RIGHT
L 1P LEFT
M 1P UP
N 1P DOWN
P 1P JUMP
R
S SERVICE
T GND
U RED
V BLUE
W TV Audio
X COUNTER
Y GND
Z GND
1P:Main Side
2P:Sub Side
1 PLAY:1 PLAYER SW.
2 PLAY:2 PLAYER SW.
P12 PIN ARRANGE
-5V
GND
+5V
REVISIONS

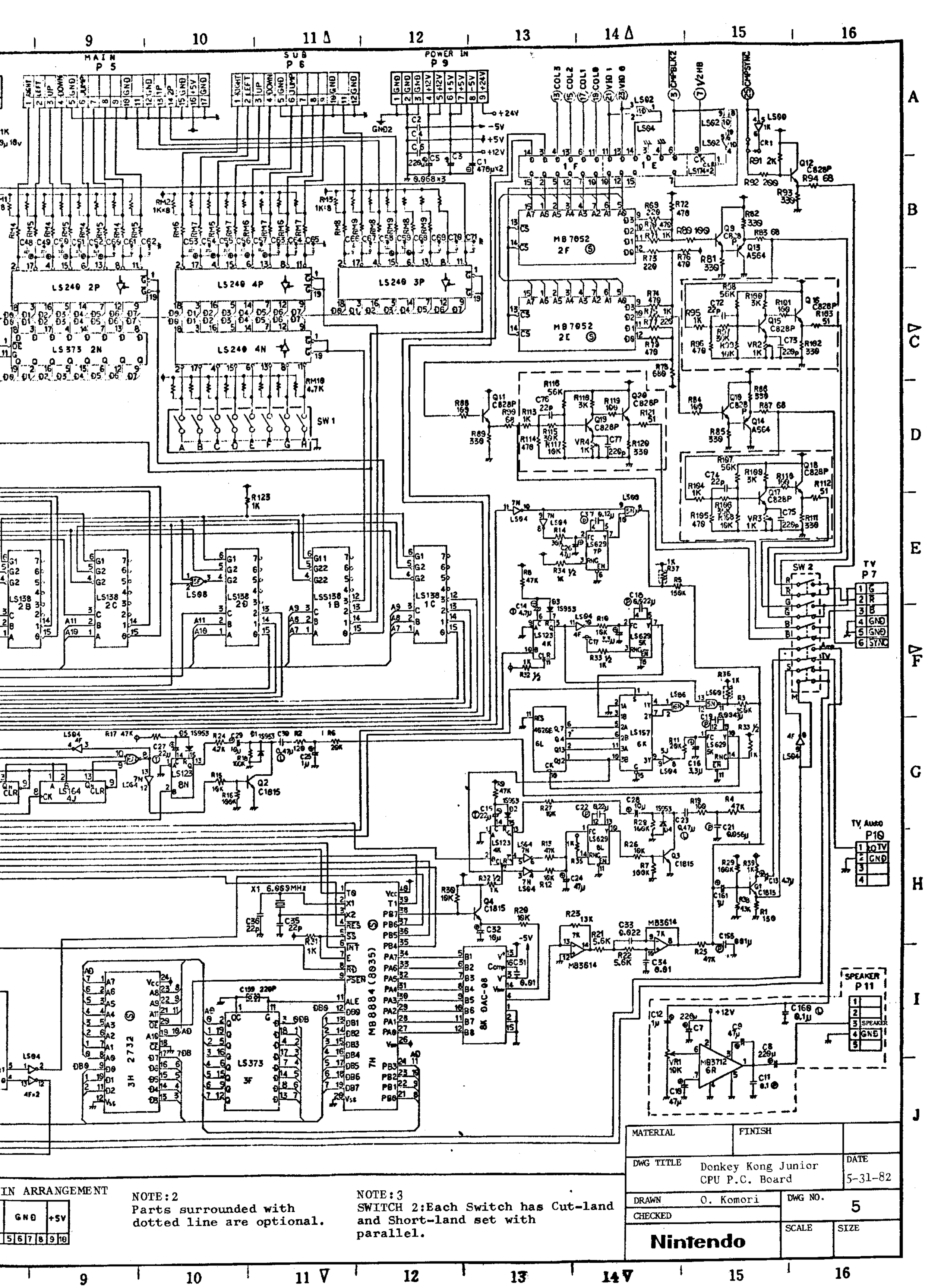

PIN ARRANGEMENT

						GND		+5V	
1	2	3	4	5	6	7	8	9	10

NOTE:2
Parts surrounded with dotted line are optional.

NOTE:3
SWITCH 2:Each Switch has Cut-land and Short-land set with parallel.

MATERIAL	FINISH		
DWG TITLE	Donkey Kong Junior CPU P.C. Board	DATE	5-31-82
DRAWN	O. Komori	DWG NO.	5
CHECKED			
Nintendo		SCALE	SIZE