Stompin' (4/4/86)

SERVICE MANUAL

© 1986 **Bally - Sente**

Stompin' game review

Please disregard Self-Test and Attract Mode information shown on page 6 of Bally Sente Field Conversion Kit Manual (M051-00C47-A019). Refer to information on this page instead.

After installing the STOMPIN' game in your SAC 1 unit, check the game as follows:

Self Test

1. Power on game. If title page of game appears, switch on Self-Test function by moving Self-Test switch located on the electronic chassis between the sound board and the game cartridge.
2. RAM and ROM Test should appear on screen (Screen 1). If RAM and all ROMs are working correctly, the test will show an "OK" next to them. If any are bad, the word "BAD" will appear on the screen.
3. At the conclusion of the RAM/ROM Test, the Sound Board Test will occur (Screen 1). If the board tests out, advance to the next test mode by pressing the ZAPPER button.
4. The next test mode is the Switch Input Test (Screen 2). Test all switches except the ZAPPER. If the correct word lights up on screen when a switch is closed, the switch is working correctly. Test coin mechancisms. If everything is working correctly, advance to next screen by pressing ZAPPER button.
5. The next test mode is the Coin Option Settings (Screen 3). The STOMPIN' game has the European coin mode options. See "Option Switch Settings"Sheet regarding the setting of European coin mode options. Press ZAPPER button to advance to next test mode.
6. The next test mode is the Game Options (Screen 4). The game features controlled by these option switch settings are self explanatory. Press the ZAPPER button to advance to next test mode.
7. You are now in the statistics mode. A series of three (3) screens display information, in bar graph form, since the last time the statistics were reset. Screen 5: Game Score Stats: Time Distribution
   Screen 6: Game Score Stats: Level Distribution
   * Screen 7: Game Score Stats: Score Distribution
   Press ZAPPER to advance through the screens! Press START to clear and reset the statistics. Move the Self-Test Switch to return the game to Play Mode.

* **Please note:** After Screen 7 is displayed, pressing ZAPPER will advance through Screens 5, 6, and 7 again. To break from this recycling, move the Self-Test Switch to return the game to Play Mode.

Play Mode

1. Title screen will appear.
2. Instruction screen will appear.
3. Game demonstation will be displayed.
4. Credits screen will appear.
5. High score table will appear.
6. Missing kids page will appear.

Game Description

STOMPIN' is a game which will challenge you both mentally and physically. In this game you, the player, are given the task of preventing various bugs and critters from eating away the food located at the center of the screen. You do this by stepping on the FLOORPLAY controller, each section of which corresponds to one of the sections surrounding the food on the screen. When stepping upon a section that is occupied by a bug, that bug is squashed and you have successfully kept him from the food. The game is over when all the food is gone.

The game consists of three (3) distinct environments. Each one contains its own set of "critters" and levels of increasing difficulty as shown in the following table.

Round	Level	Environment Displayed on Screen	Critters
1	1	Kitchen Floor W/Cheese in Center Square	Ants
2	2	" " "	Ants & Cockroaches
* 3	3	" " "	Ants, Cockroaches & Mice
* 4	4	" " "	Ants,Cockroaches,Mice & Spiders
* 5	5	Patio W/Hot Dogs on Barbecue Grill in Center Square	Gophers
6	6	" " "	Crows
7	7	" " "	Gophers & Crows
8	8	Pond W/Small Flies in Center Square	Slow Frogs
* 9	9	" " "	Slow Fish
* 10	10	" " "	Fast Frogs
* 11	11	" " "	Fast Fish

After Round 11 ends, the succeeding rounds will repeat the same level of difficulty, (Level 11).

* **NOTE:** By using a Game Option Switch, a bee will appear in various rounds. If the bee is squashed during a round, a bonus of 2000 points are awarded. Also, all of the other critters will be killed automatically with their point values added to the score and the round ends.

STOMPIN'

OPTION SWITCH SETTINGS - DIP SWITCH "G1"

VARIOUS GAME PLAY OPTIONS

	SW#1	SW#2	SW#3	SW#4	SW#5	SW#6	SW#7	SW#8
* MISSING KIDS DISPLAYED	OFF			XX	XX			
MISSING KIDS NOT DISPLAYED	ON			XX	XX			
* KID ON RIGHT NOT LOCATED		OFF						
KID ON RIGHT WAS LOCATED		ON						
* KID ON LEFT NOT LOCATED			OFF					
KID ON LEFT WAS LOCATED			ON					
* ATTRACT SOUND PRESENT						OFF		
ATTRACT SOUNDS ABSENT						ON		
NO BEE PRESENT							OFF	
* BEE IS IN GAME							ON	
NO BUGS (For Floor Demo)								OFF
* BUGS PRESENT (Regular Play)								ON

*** INDICATED FACTORY RECOMMENDED SETTINGS**

PART NO. M051-00E38-A007

STOMPIN'

O P T I O N S W I T C H S E T T I N G S - D I P S W I T C H "H1"

COINS PER CREDIT

VARIOUS CREDIT OPTIONS	SW#1	SW#2	SW#3	SW#4	SW#5	SW#6	SW#7	SW#8
FREE PLAY	OFF	OFF	OFF	OFF	OFF	OFF	OFF	OFF
* 1 COIN / 1 CREDIT	ON	ON						
1 COIN / 2 CREDITS	OFF	ON						
2 COINS / 1 CREDIT	ON	OFF						
3 COINS / 1 CREDIT	OFF	OFF						

COINS ADD BONUS COINS

* NO BONUS COINS	ON	ON	ON
2 COINS ADDS 1 BONUS COIN	OFF	ON	ON
3 COINS ADDS 1 BONUS COIN	ON	OFF	ON
4 COINS ADDS 1 BONUS COIN	OFF	OFF	ON
4 COINS ADDS 2 BONUS COINS	ON	ON	OFF
5 COINS ADDS 1 BONUS COIN	OFF	ON	OFF
5 COINS ADDS 2 BONUS COINS	ON	OFF	OFF
5 COINS ADDS 3 BONUS COINS	OFF	OFF	OFF

COIN MECH MULTIPLIER

* LEFT COIN MECH X 1	ON
LEFT COIN MECH X 2	OFF

* RIGHT COIN MECH X 1	ON	ON
RIGHT COIN MECH X 4	OFF	ON
RIGHT COIN MECH X 5	ON	OFF
RIGHT COIN MECH X 6	OFF	OFF

*** INDICATED FACTORY RECOMMENDED SETTINGS**

PART NO. M051-00E38-A007

KIT PARTS LIST: STOMPIN' U.R.
PART NO. GE38-00001-0000

ORDER BY PART NUMBER **ONLY**

ITEM	PART NO.	DESCRIPTION
1	AE38-00004-0000	CONTROL SHELF ASSY.
	AE38-00005-0000	CONTROL SHELF CABLE ASSY.
	B006-08029-010B	FLOOR-PLAY INTERFACE BD. ASSY.
	U570-00042-0200	SWITCH: SW., SPST., 1A, 125VAC - RED
	0E38-00100-00XF	PANEL: CONTROL SHELF SCREENED
	0E38-00101-0000	BRKT: INTERFACE SUPPORT
	0E38-00700-00XF	END: GRAB BAR (2 REQ'D.)
	0E38-00701-0000	TUBING: GRAB BAR
	0E38-00901-0000	CUSHION: GRAB BAR
	0017-00032-0092	SWITCH: SPDT P.B. MOMENTARY, LED.
	0929-00905-00XF	BEZEL: SWITCH
2	AE38-00007-0000	FLOOR ASSY.
3	AE38-00009-0000	CABINET MOUNTING PLATE ASSY.
	0E38-00108-0000	PLATE: CABINET MOUNTING
	0017-00103-0013	NUT 10-32 WELD (2 REQ'D.)
4	AE38-00014-0000	BAG & HARDWARE ASSY.
	0017-00101-0760	10-32 X 16 PHILLIPS ROUND WASHER HEAD SCREW (2 REQ'D.)
	0017-00101-0807	5/16-18 X 12 UNSLOTTED HEX HD. STOVE BOLT (2 REQ'D.)
	0017-00102-0045	3/8-16 X 12 UNSLOTTED HEX HD. STOVE BOLT (2 REQ'D.)
	0017-00104-0103	WASHER: FLAT .390 I.D., .625 O.D., .031 TH. (2 REQ'D.)
5	AE38-00300-0000	KIT INSTRUCTION ASSY.
	M051-00E38-A007	TAG: OPTION SWITCH SETTINGS
	M051-00C47-A019	MANUAL: CONVERSION KIT
6	AE38-00301-0000	GAME INFORMATION SHEET ASSEMBLY: STOMPIN' U.R.
	M051-00E38-A014	GAME REVIEW SHEET: STOMPIN'

KIT PARTS LIST: STOMPIN' U.R., CONT'D.
PART NO. GE38-00001-0000

ORDER BY PART NUMBER **ONLY**

ITEM	PART NO.	DESCRIPTION
	M051-00E38-A015	PARTS LIST: STOMPIN' U.R.
	M051-00E38-A017	FLOOR-PLAY ASSY.: INSTALLATION PROCEDURE
	M051-00E38-A007	OPTION SWITCH SETTINGS SHEET
	M051-00E38-A018	FLOOR-PLAY ASSY.: PARTS ILLUSTRATION SHEET
	M051-00E38-A019	PARTS LIST: FLOOR-PLAY ASSY.
	M051-00E38-A017	FLOOR-PLAY ASSY.: INSTALLATION PROCEDURE
	M051-00E38-A016	CONTROL PANEL & FLOOR PLAY ASSY. WIRING DIAGRAM: STOMPIN' U.R.
	M051-00C47-A003	SAC 1A WIRING DIAGRAM
	M051-00E19-B003	SAC 1B WIRING DIAGRAM
	M051-00E23-A005	SAC-MAN WIRING DIAGRAM
	M051-00114-A148	COMPONENT LAYOUT & PARTS LIST: 256K CARTRIDGE BD.
	M051-00114-A149	SCHEMATIC: 256K CARTRIDGE BD.
	M051-00E38-B012	COMPONENT LAYOUT & PARTS LIST: FLOOR-PLAY INTERFACE P.C.B.
	M051-00E38-B013	SCHEMATIC: FLOOR-PLAY INTERFACE P.C.B.
	M051-00E38-A010	PARTS LIST: FLOOR-PLAY LAMP BD.
	M051-00E38-A011	SCHEMATIC: FLOOR-PLAY LAMP BD.
7	A084-91834-AE38	PROGRAMMED 128K CARTRIDGE W/SECURE
8	U858-00632-U802	6-32 X 8 SOC BUTTON HD. SCREW
9	0E38-00900-0000	HEADER: GRAPHIC "STOMPIN'"
10	0017-00103-0052	NUT 6-32 LOCKING (9 REQ'D.)

MOUNTING PROCEDURE FOR
FLOOR PLAY ASSEMBLY TO UPRIGHT GAME CABINET:
SAC 1, SAC 1A, SAC 1B & SAC-MAN (PAC-MAN, GALAXIAN, MS. PAC-MAN, TRACK 'N' FIELD, & HYPERSPORT)

1. For SAC 1A, SAC 1B, & SAC-MAN game cabinets: Remove rear door and lay cabinet on its side. Drill 2" hole in bottom of cabinet as shown in Figure 1.
   For SAC 1 game cabinet only: Remove rear door and notch it as shown in Figure 1A. Lay cabinet on its side.

2. With cabinet still on its side, attach Cabinet Mounting Plate to front leg leveler mounting holes using two (2) hex bolts * and two (2) washers provided with kit (see Figure 2).
   * NOTE: For SAC 1: 5/16"-18 X 3/4" unslotted hex head stove bolt & for SAC 1A, SAC 1B & SAC-MAN: 3/8-16 X 3/4" unslotted hex head stove bolt.

3. Stand cabinet upright. Run cable of Floor Play Assembly thru slot in Cabinet Mounting Plate (see Figure 3).
   For SAC 1A, SAC 1B & SAC-MAN game cabinets: Feed Floor Play cable into cabinet thru 2" hole in cabinet bottom (see Figure 3).
   For SAC 1 game cabinet only: Run Floor Play Cable under cabinet to its rear and bring cable into cabinet thru rear opening where rear door notch is located (see Figure 2).
   For all game cabinets, position Floor Play Assembly over nuts welded on Cabinet Mounting Plate and fasten with two (2) 10-32 X 1" phillips round washer hd. screws provided with kit.

4. Run Floor Play cable up inside wall (either side) of cabinet. Secure Floor Play cable to wall using 3/4" wire harness clamps provided with kit. Connect Floor Play cable connector J1 to P2 connector of Control Interface P.C.B. mounted on Control Shelf Insert (see Figure 3).

5. Secure rear door to game cabinet.

MOUNTING PROCEDURE FOR FLOOR PLAY ASSEMBLY TO UPRIGHT GAME CABINET: SAC 1, SAC 1B & SAC-MAN (PAC-MAN, GALAXIAN, MS. PAC-MAN, TRACK 'N' FIELD & HYPERSPORT), CONTD.

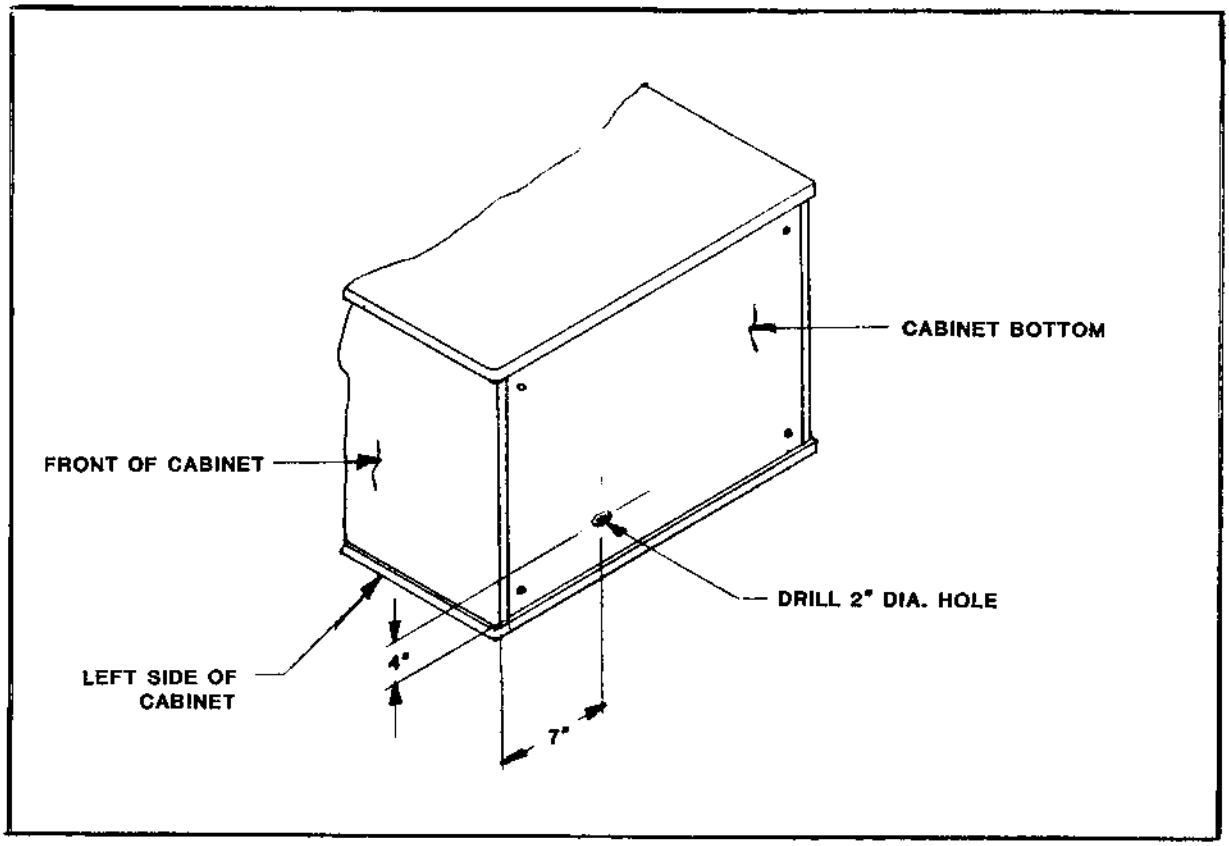

FIGURE 1

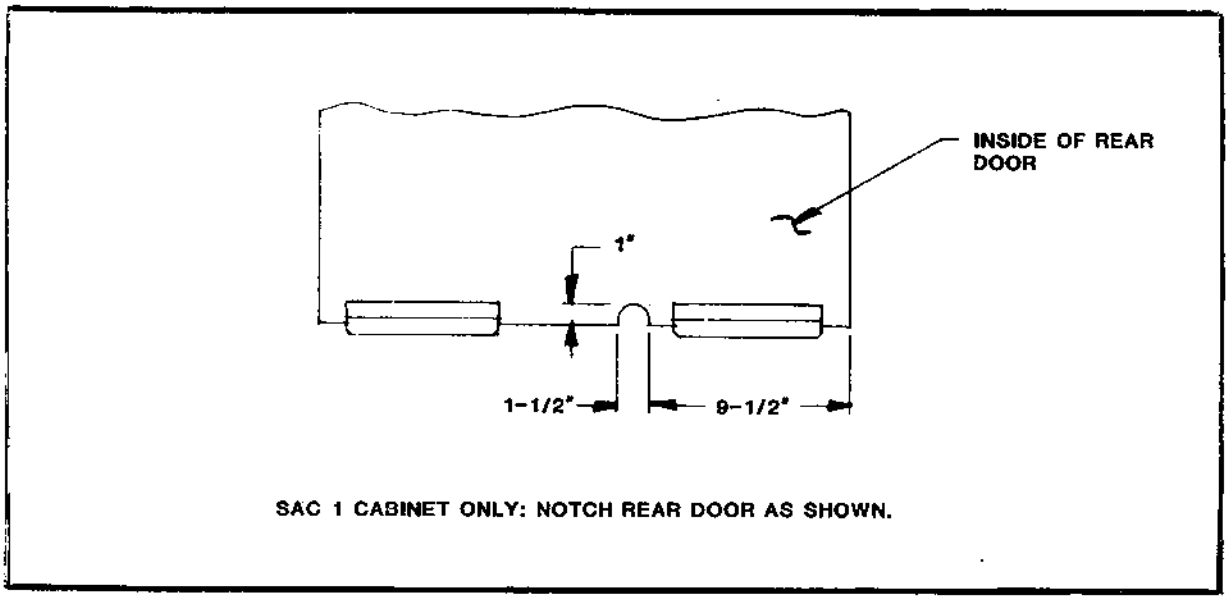

SAC 1 CABINET ONLY: NOTCH REAR DOOR AS SHOWN.

FIGURE 1A

MOUNTING PROCEDURE FOR FLOOR PLAY ASSEMBLY TO UPRIGHT GAME CABINET:
SAC 1, SAC 1B & SAC-MAN (PAC-MAN, GALAXIAN, MS. PAC-MAN,
TRACK 'N' FIELD & HYPERSPORT), CONTD.

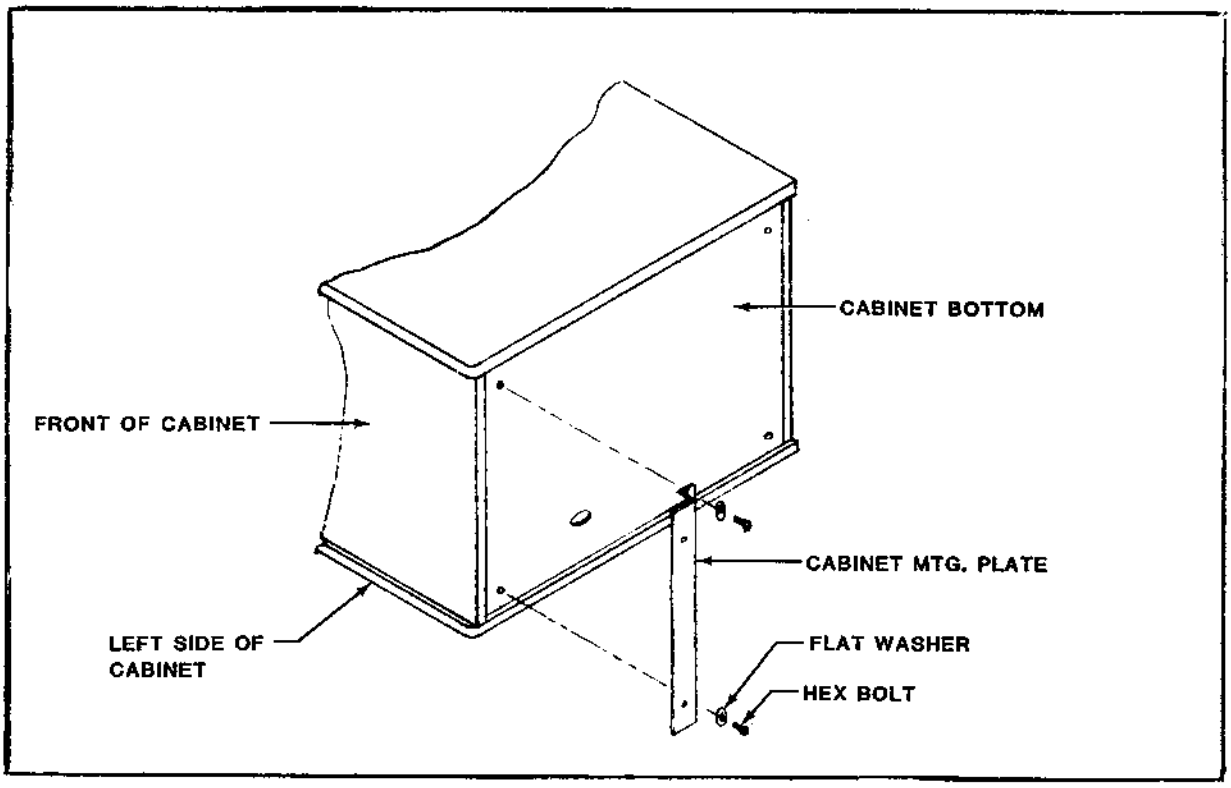

FIGURE 2

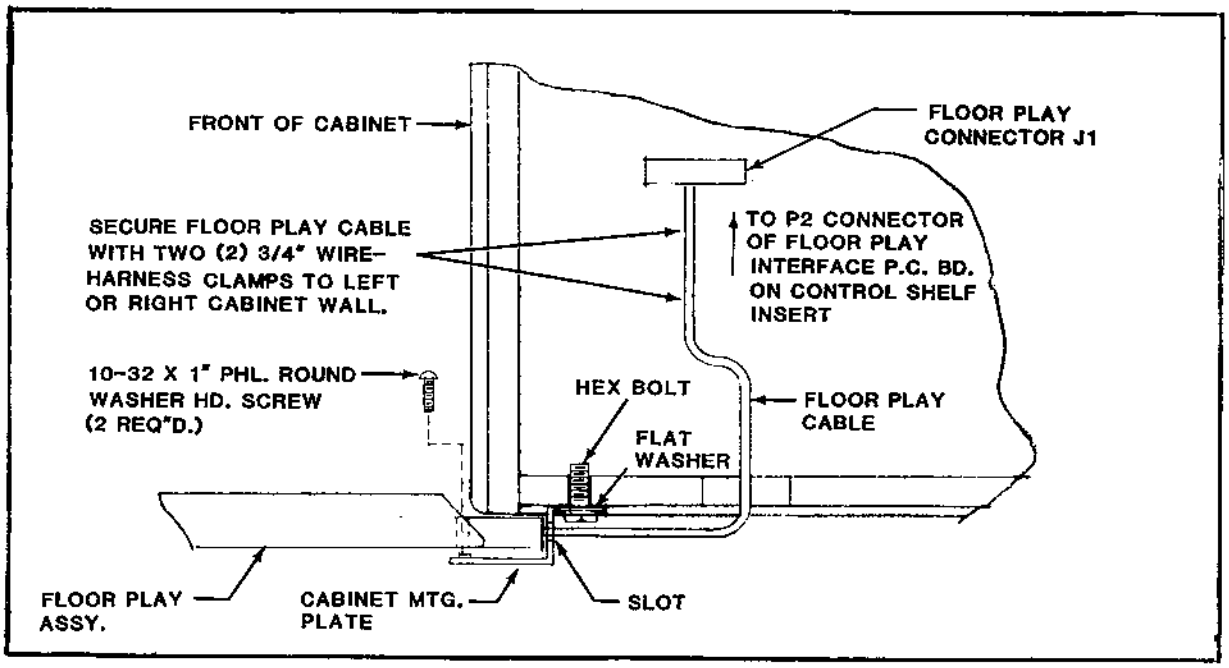

FIGURE 3

FLOOR-PLAY ASSEMBLY
PART NO. AE38-00007-0000

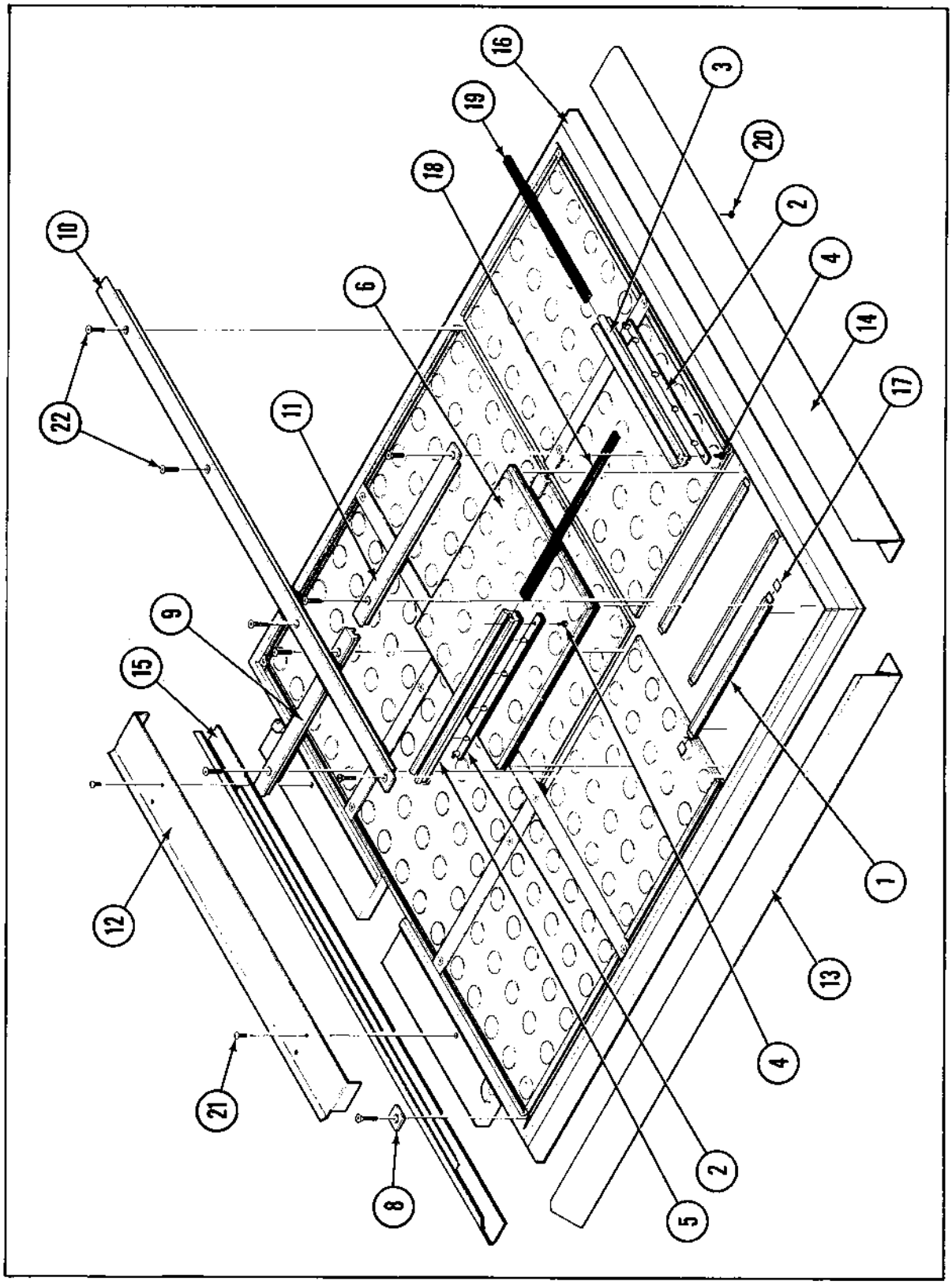

FLOOR-PLAY ASSEMBLY PARTS LIST
AE38-00007-0000

ORDER BY PART NUMBER **ONLY**

ITEM	PART NO.	DESCRIPTION
1	AE38-00006-0000	TAPESWITCH ASSY. (27 REQ'D.)
	AE38-00011-0100	LENS, CHANNEL & LED 9-15/32 (6 REQ'D.) (INCLUDES ITEMS 2, 3 & 4)
2	U006-08028-010A	FLOOR CONTROL LAMP BD. ASSY.
	U007-08028-010A	FLOOR CONTROL LAMP P.C. BD.
	U550-00086-0100	CONNECTOR KK100 PCM M02A: SQUARE TIP
	100E-00005-0035	120 OHM 1/4W RESISTOR
	119E-00001-0007	L.E.D.: RED MV5760 (4 REQ'D.)
3	0E38-00102-0100	CHANNEL: LENS
4	0017-00101-0518	5-40 X 5 PHILLIPS PAN HEAD M.S.
	AE38-00011-0200	LENS, CHANNEL & LED 10-23/32 (6 REQ'D.) (INCLUDES ITEMS 2, 4 & 5)
5	0E38-00102-0200	CHANNEL: LENS
6	AE38-00012-0000	PAD ASSY. W/TAPE ASSY. (9 REQ'D.)
7	AE38-00013-0000	FLOOR-PLAY CABLE ASSY. (NOT SHOWN)
8	0E38-00103-0000	WASHER: SQUARE (4 REQ'D.)
9	0E38-00104-0000	DIVIDER: CENTER (2 REQ'D.)
10	0E38-00105-0000	DIVIDER: HORIZONTAL (2 REQ'D.)
11	0E38-00106-0000	DIVIDER: END (4 REQ'D.)
12	0E38-00107-0000	COVER: END
13	0E38-00109-01XF	BASE-FRAME: L = 34.781 (2 REQ'D.)
14	0E38-00109-02XF	BASE-FRAME: L = 31.031
15	0E38-00110-00XF	BASE-FRAME: FRONT
16	0E38-00501-0000	BASE: FLOOR-PLAY ASSY.
17	0E38-00902-0000	INSULATOR: TAPESWITCH (54 REQ'D.)

M051-00E38-A019

FLOOR-PLAY ASSEMBLY PARTS LIST CONT'D.
AE38-00007-0000

ORDER BY PART NUMBER **ONLY**

ITEM	PART NO.	DESCRIPTION
18	0E38-00904-0100	LENS: L = 10.968 (6 REQ'D.)
19	0E38-00904-0200	LENS: L = 9.718 (6 REQ'D.)
20	0017-00101-0337	5 X 8 PHILLIPS PAN HEAD SCREW (16 REQ'D.)
21	0017-00101-0117	8 X 10 PHILLIPS TRUSS HEAD SCREW (4 REQ'D.)
22	0017-00101-0684	10 - 32 X 16 HEX SOCKET FLAT HEAD SCREW (24 REQ'D.)

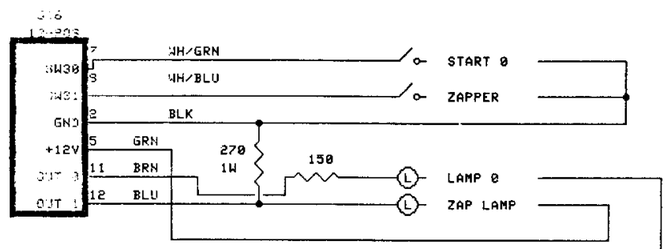

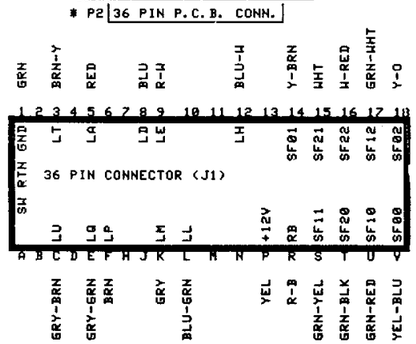

P2 ON FLOORPLAY INTERFACE P.C.B.

CONNECTS TO

J1 FLOORPLAY CABLE CONNECTOR

* FOR P2 P.C.B. CONNECTOR PIN-OUT INFORMATION, REFER TO FLOORPLAY INTERFACE P.C.B. SCHEMATIC.

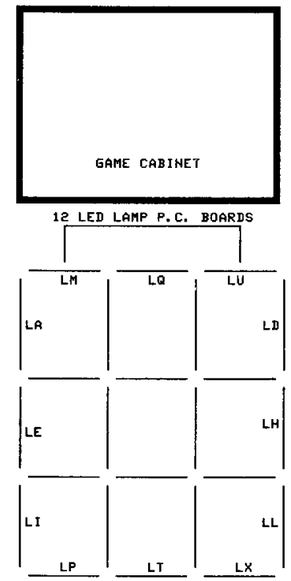

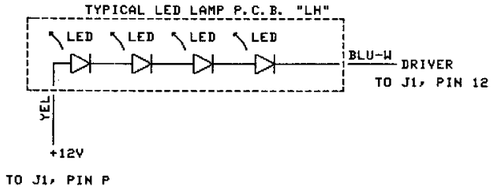

EXAMPLE:

* LH= LED LAMP P.C.B. AT LOCATION "H"
U006-08028-010A

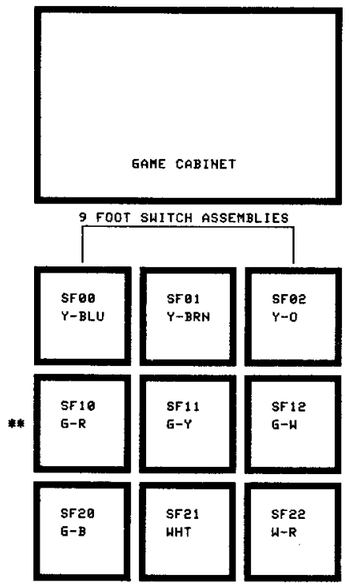

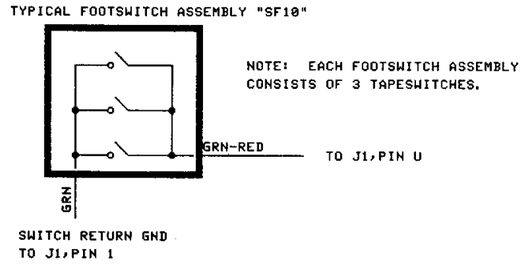

NOTE: EACH FOOTSWITCH ASSEMBLY CONSISTS OF 3 TAPESWITCHES.

EXAMPLE:
** SF10= FOOT SWITCH AT LOCATION "10"

TAPESWITCH: AE38-00006-0000

NOTE: EDGE CONNECTOR NOT KEYED:
PIN 1 OF P2 CONNECTS TO PIN 1 OF J1.

NOTES:	BALLY MIDWAY MFG. CO.
WAYNE STONE	
4/9/86	STOMPIN U.R. CONTROL PANEL & FLOORPLAY ASSY. WIRING DIAGRAM M051-00E38-A016
	SHEET 1 OF 1 REV B

APR 86 13:48 /USER/WES/STOMP 1:BRAW

POWER CHASSIS ASSY
AC47-00009-0000

LINE CORD

ORN +5V
ORN +5V
WHT 15V
WHT 15V
RED 12V
R-Y 12V CT
RED 12V
YEL 12V UNREG
YEL 12V UNREG
P1 9POS

POWER SUPPLY
B006-00009-100B

P2
+5V RED
+5V RED
+5V RED
+5V RED
+5V SENSE W-R
AC SENSE GRY
- SENSE W-B
GND BLK
GND BLK
GND BLK
GND BLK

P19
+12V GRN
+12V GRN
GND BLK
GND BLK
GND BLK
-12V YEL
-12V YEL

P6 36POS LEAF
B006-00001-100C
SENTE MAIN CPU BOARD

P13
@WHT 0V
@BLK 115V
GRN

MONITOR

P12
@WHT
@GRN
@BLK

FLUORESCENT LIGHT

P3
W-BRN
BRN

SPEAKERS

P11
@BLK
@WHT
@WHT
@BLK

ON/OFF SW
SAFETY SW (TOP)
SAFETY SW (DOOR)

P4
RED
BLK & SHIELD
GRN
YEL
BLK

TO MONITOR
RED
GRN
BLU
YEL
WHT
BLK
6POS

P5
AUDIO OUT
A.GND
+12V
-12V
GND
CLK
TXD
RXD

SOUND BD
B006-00002-100B

TEST SW
W-B
BRN-B
GRY-Y
B-W
BLK

P7 22POS

J14
G-W 12V COIN METER
12V COIN DOOR LIGHTS
BLK GND GROUND
GND COIN DOOR LIGHTS
BLU-W OUT6 COIN METER
Y-BRN SW26 COIN 0
B-R SW36 COIN 1
G-Y GND

J16
BRN OUT0
BLU-BRN OUT1
B-G SW20
R-W SW21
GRY-G SW28
Y-BLU SW23
GRY-BRN SW38
O-G SW31
O-R SW32
B-R SW33
BLK GND
+12V
TO CONTROL PANEL

J20
G-R +12V
BLK GND
B-R SW33
ORN-Y OUT2
BRN-Y SW35
B-Y SW34
WHT SW25
BLU-B SW24
W-Y AN3
O-W AN2
R-B AN1
BLU-G AN0
Y-O OUT3
YEL -12V
RED +5V
TO CONTROL PANEL

J15
+5V
-12V
OUT3
OUT4
OUT5
AN7
AN6
AN5
AN4
GRN
BLU
W-Y
W-GRY
W-GRN
W-BLU
TO CONTROL PANEL

VOLTAGE SELECTOR 6POS M-N-L

110 VAC SELECTION (YELLOW)

220 VAC SELECTION (BLUE)

NOTES:	BALLY SENTE, INC.
W STONE	SAC 1A
3/20/86	
RELEASE PROD.	M051-00C47-A003
3/25/86 RW	
	SHEET 1 OF 1 REV A

20 MAR 86 11:11 /USER2/VMC/SENTE.DR 1. DRAW

REV. A

MASTER CABLE WIRE	WAS CONNECTED TO	NOW
GREEN-WHITE (G-W)	P7, PIN K	P19, P10
GREEN-RED (G-R)	P7, PIN L	P19, P11

FROM ISOLATION TRANSFORMER OF POWER CHASSIS ASSY

ORN +5V
ORN +5V
WHT 15V
WHT 15V
RED 12V
R-Y 12V CT
RED 12V
YEL 12V UNREG
YEL 12V UNREG

P1 9POS

POWER SUPPLY
B006-08009-100B

P2

1	+5V	RED
2	+5V	RED
3	+5V	RED
4	+5V	RED
5	+5V SENSE	W-R
6	AC SENSE	GRY
7	- SENSE	W-B
8	GND	BLK
9	GND	BLK
10	GND	BLK
11	GND	BLK

P19

3	+12V	GRN
4	+12V	GRN
5	GND	BLK
6	GND	BLK
7	GND	BLK
8	-12V	YEL
9	-12V	YEL
10	UNREG +12V	G-W
11	UNREG +12V	

TO J14 PINS *

G-R

TO J16 PIN 5 AND J20 PIN 5

P6 30POS LEAF

MONITOR CABLE ASSY (SEE NOTE 3)

P13

@WHT 8V — J1 2 — *BLK
@BLK 115V — 1 — *BLK
@GRN GND

MONITOR

POWER CHASSIS ASSY AE23-00008-0000

P3

W-BRN
BRN

SPEAKER CABLE ASSY

SPEAKER

P4

RED
BLK & SHIELD
GRN
YEL
BLK

P12

@WHT — J2 3 — @BLU
@GRN — 2 — @G-Y
@BLK — 1 — @BRN

DISPLAY LAMPS ASSY

HIGH VOLTAGE CABLE ASSY (SEE NOTE 3)

P11

@BLK
@WHT
@WHT
@BLK — @BLK
ON/OFF SW
SAFETY SW (DOOR)

P9

LINE CORD

TO 6 POS PCB CONN ON MONITOR

RED
GRN
BLU
YEL
WHT
BLK

6POS

P5

AUDIO OUT
A.GND
+12V
-12V
GND
CLK
TXD
RXD

AUDIO BD. B006-08002-100B

TEST SW
TEST SW BRKT

SENTE MAIN CPU BOARD

P7 22POS

TO P19 PIN 10

G-W

LOOSE PINNED WIRES

J14 (SEE NOTE 4)

12V	COIN DOOR LIGHTS
12V	COIN METER
GND	COIN DOOR LIGHTS (GND)
GND	SW RETURN
OUT6	COIN METER RETURN
SW26	COIN SW 1
SW36	COIN SW 2
	GND WIRE MOUNTED TO GROUND STRAP

BLK
BLU-W
Y-BRN
B-R
G-Y

J16

BRN	11	OUT0
BLU-BRN	12	OUT1
B-G	1	SW20
R-W	3	SW21
GRY-G	4	SW22
Y-BLU	6	SW23
GRY-BRN	7	SW30
O-G	8	SW31
O-R	9	SW32
B-R	10	SW33
BLK	2	GND
		+12V

TO CONTROL PANEL NOTE 3

G-R

TO P19 PIN 11

J20

+12V	1	
GND	2	
B-R	11	SW33
ORN-Y	14	OUT2
BRN-Y	13	SW35
B-Y	12	SW34
WHT	10	SW25
BLU-B	9	SW24
W-VIO	8	AN3
O-W	7	AN2
R-B	6	AN1
BLU-G	4	AN0
Y-O	15	OUT3
YEL	3	-12V
RED	1	+5V

TO CONTROL PANEL NOTE 3

J15

+5V	1	
-12V	3	
	7	OUT3
GRN	8	OUT4
BLU	9	OUT5
W-Y	6	AN7
W-GRY	5	AN6
W-BRN	4	AN5
W-BLU	2	AN4

TO CONTROL PANEL NOTE 3

USED ON POWER CHASSIS ASSY
VOLTAGE SELECTOR 6POS M-N-L

6 5 4 / 3 2 1 — 110 VAC SELECTION (YELLOW)

6 5 4 / 3 2 1 — 220 VAC SELECTION (BLUE)

NOTES

1. MASTER CABLE ASSY. CONSISTS OF ALL WIRING IN THIS DIAGRAM EXCEPT FOR WIRING GROUPS IDENTIFIED OTHERWISE
2. CONNECTORS MARKED "P" OF CABLE ASSY'S FASTEN TO CONNECTORS MARKED "J"ON THE PCB'S AND THE POWER CHASSIS ASSY
3. JACK CONNECTORS MARKED "J" OF CABLE ASSY'S FASTEN TO JACK CONNECTORS MARKED "J" OF GAME ASSY'S
4. PLEASE REFER TO SHEET 2 OF 2 FOR COIN DOOR CABLING MODIFICATIONS IN SAC-MAN KIT INSTRUCTION MANUAL J14 IS AS PINCOR A 6 PIN) JACK CONNECTOR THAT LOOSE WIRES MUST BE PINNED INTO.

NOTES: V CAPORUSSO REL FOR PROD 5/25/81 RW	BALLY SENTE, INC.
	SACMAN
	M051-00E23-A005
	SHEET 1 OF 1 REV A

21 MAR 85 11:46 /USER/MES/SACMAN 1.DRAW

REV. D

MASTER CABLE WIRE	WAS CONNECTED TO	NOW
GREEN-WHITE(G-W)	P7, PIN K	P19, P10
GREEN-RED(G-R)	P7, PIN L	P19, P11

POWER CHASSIS ASSY
AE19-00009-0000

P1 9POS
ORN +5V
ORN +5V
WHT 15V
WHT 15V
RED 12V
R-Y 12V CT
RED 12V
YEL 12V UNREG
YEL 12V UNREG

POWER SUPPLY
B006-00009-1003

P2
+5V RED
+5V RED
+5V RED
+5V RED
+5V SENSE W-R
AC SENSE GRY
- SENSE W-B
GND BLK
GND BLK
GND BLK
GND BLK

P19
+12V GRN
+12V GRN
GND BLK
GND BLK
GND BLK
-12V YEL
-12V YEL
UNREG +12V G-W
UNREG +12V G-R

TO J14 5,8

TO J16-5 AND J20-5

P6 38POS LEAF

P3
W-BRN
BRN

SPEAKERS

P13
WHT 0V
BLK 115V
GRN

MONITOR

P12
WHT
GRN
BLK

FLUORESCENT LIGHT

P11
BLK
WHT
WHT
BLK

ON/OFF SW
SAFETY SW (TOP)
SAFETY SW (DOOR)

P4
RED
BLK & SHIELD
GRN
YEL
BLK

P5
AUDIO OUT
A. GND
+12V
-12V
GND
CLK
TXD
RXD

SOUND BD
B006-00002-1003

TO MONITOR
RED
GRN
BLU
YEL
WHT
BLK
6POS

TEST SW

W-B
BRN-B
GRY-Y
B-W
BLK

P7 22POS

SENTE MAIN CPU BOARD B006-00001-100C

TO P19 PIN 10

J14
12V — COIN METER
COIN DOOR LIGHTS
BLK — GND — GROUND
GND
BLU-W — OUT6 — COIN DOOR LIGHTS
Y-BRN — SW26 — COIN METER
B-R — SW36 — COIN 0
G-Y — GND — COIN 1

J16
BRN — OUT0
BLU-BRN — OUT1
B-G — SW20
R-W — SW21
GRY-G — SW22
Y-BLU — SW23
GRY-BRN — SW30
D-G — SW31
O-R — SW32
B-R — SW33
BLK — GND
+12V
TO CONTROL PANEL

G-R TO P19 PIN 11

J20
+12V
BLK — GND
B-R — SW33
ORN-Y — OUT2
BRN-Y — SW35
B-Y — SW34
WHT — SW25
BLU-B — SW24
W-Y — AN3
O-W — AN2
R-B — AN1
BLU-G — AN0
Y-O — OUT3
YEL — -12V
RED — +5V
TO CONTROL PANEL

J15
+5V
-12V
OUT3
GRN — OUT4
BLU — OUT5
W-Y — AN7
W-GRY — AN6
W-GRN — AN5
W-BLU — AN4
TO CONTROL PANEL

LINE CORD

VOLTAGE SELECTOR 6POS M-N-L

110 VAC SELECTION (YELLOW)

220 VAC SELECTION (BLUE)

NOTES:	BALLY SENTE, INC.
V CAPORUSSO	
12/12/85	SAC1B
REL FOR PROD. 3/25/86 RW	M051-00E19-0003
	SHEET 1 OF 1 REV D

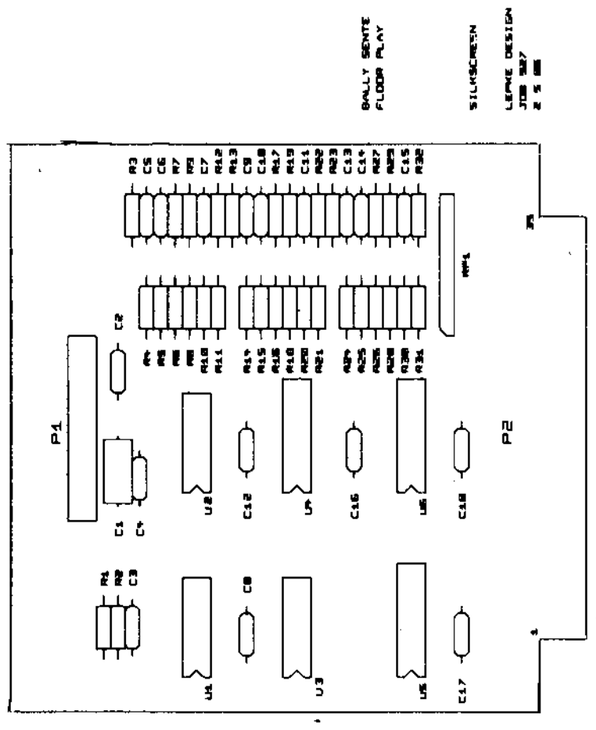

FLOOR PLAY INTERFACE P.C.
U006-08029-010B
M051-00E38-B012

CROSS REFERENCE LIST

DESCRIPTION	QTY.	DESIGNATION NO.	PART NOS.
UCN 4821 1/4W 5% CARBO	3	U4,U5,U6	0066-352XX-XXLX
74HC14	1	U1	U210-00018-0100
LM324	1	U2	U260-00054-0100
74HC74	1	U3	U210-00016-0100
20K 1/4W 1%	6	R26,R28,R16,R18 R6,R8	U450-02002-0100
80.6K 1/4W 1%	6	R31,R29,R21,R19 R11,R9	U450-08062-0100
39.2K 1/4W 1%	9	R24,R27,R30,R14 R17,R20,R4,R7,R10	U450-03922-0100
1K 1/4W 5%	11	R23,R25,R32,R13 R15,R22,R3,R5,R12 R1,R2	U400-01001-0100
10 POS. SIP 470 OHM	1	RP1	U460-00012-0100
.1UF 50V	17	C2 - C18	U300-00009-0100
2.2UF TANT. 10V	1	C1	U310-00013-0100
8 PIN KK156 W/LOCKING TAB	1	P1	U550-00065-0100
P.C.B.	1		U007-08029-010B

REV. A - 3/27/86 J.S.

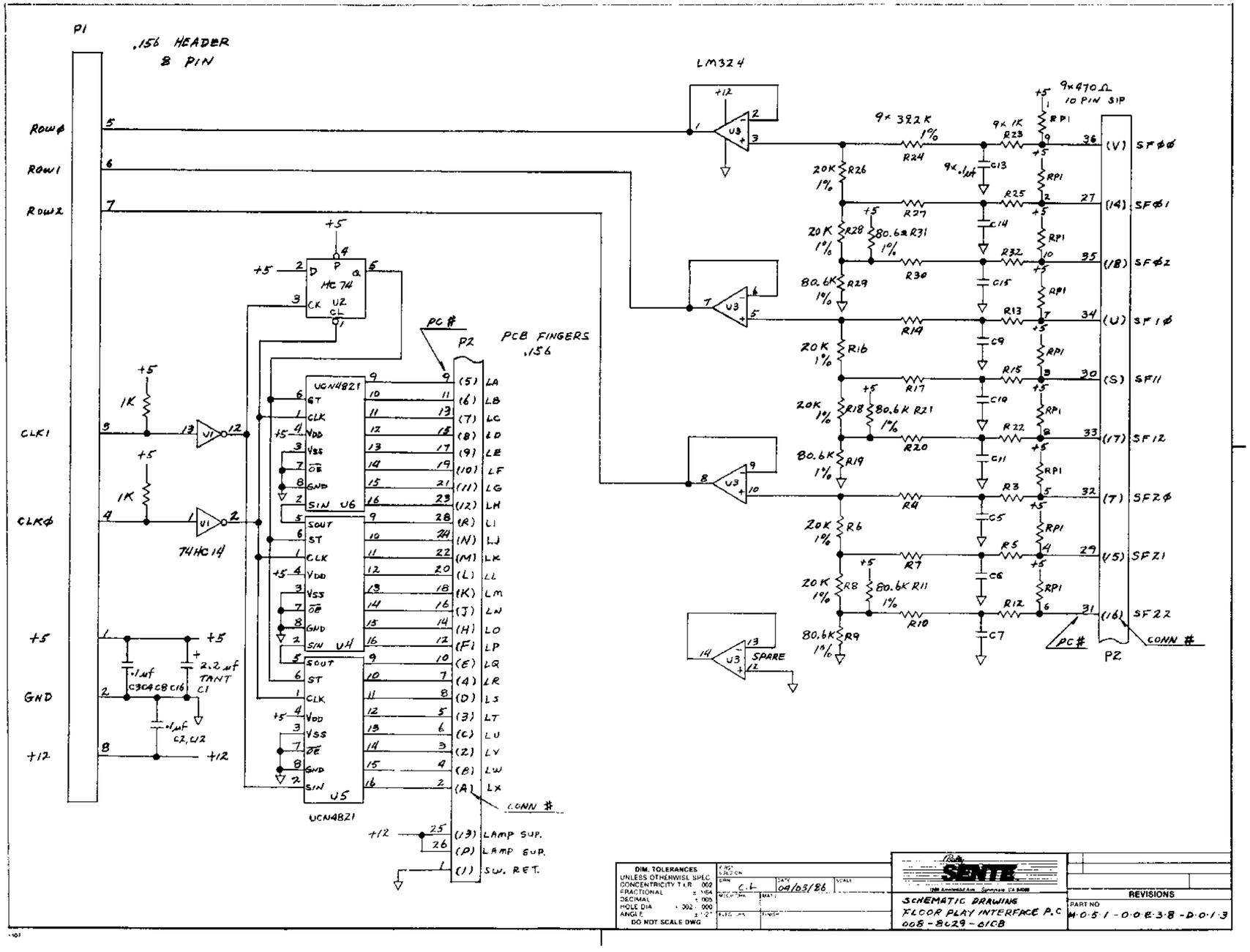
P1
.156 HEADER
8 PIN
ROW0
ROW1
ROW2
CLK1
CLK0
+5
GND
+12
74HC14
HC74
UCN4821
PCB FINGERS
.156
PC #
P2
CONN #
LAMP SUP.
SW. RET.
LM324
SPARE
9x 392K
9x 470Ω
10 PIN SIP
SF00
SF01
SF02
SF10
SF11
SF12
SF20
SF21
SF22
DIM. TOLERANCES
UNLESS OTHERWISE SPEC
CONCENTRICITY T.I.R. .002
FRACTIONAL ± 1/64
DECIMAL ± .005
HOLE DIA ± .002 - .000
ANGLE ± 1/2°
DO NOT SCALE DWG
C.L
04/03/86
SENTE
SCHEMATIC DRAWING
FLOOR PLAY INTERFACE P.C
008-8029-01CB
REVISIONS
PART NO
M-0-5-1-0-0-E-3-8-D-0-1-3

UN-PROG CARTRIDGE 128K W/SECURE CHIP
A082-91834-A000
(SENTE BOARD NO. 006-8027-01-0B)

CROSS REFERENCE LIST

DESCRIPTION	QTY.	REFERENCE NO.	PART NOS.
PCB	1		A080-91834-A000
74LS139	1	U5B	U200-00049-0100
74LS245	1	U5C	U200-00056-0100
RAM NOV	1	U8C	U230-00007-0100
ST 1002 SECURITY CHIP	1	U6B	U260-00050-010A
CAP CER. .1M 50V 20%	23	C1-C23	U300-00009-0100
CAP TANT. 2.2MF 10V 20%	2	C24,C25	U310-00013-0100
SOCKET 28 PIN	12	U1A-U8A,U1C-U4C	110E-00001-0010
SOCKET 20 PIN	1	U7C	U510-00017-0100
SOCKET 40 PIN	1	U6B	110E-00001-0011
CONNECTOR AMP 2-102584-0	1	P1	U550-00064-0100

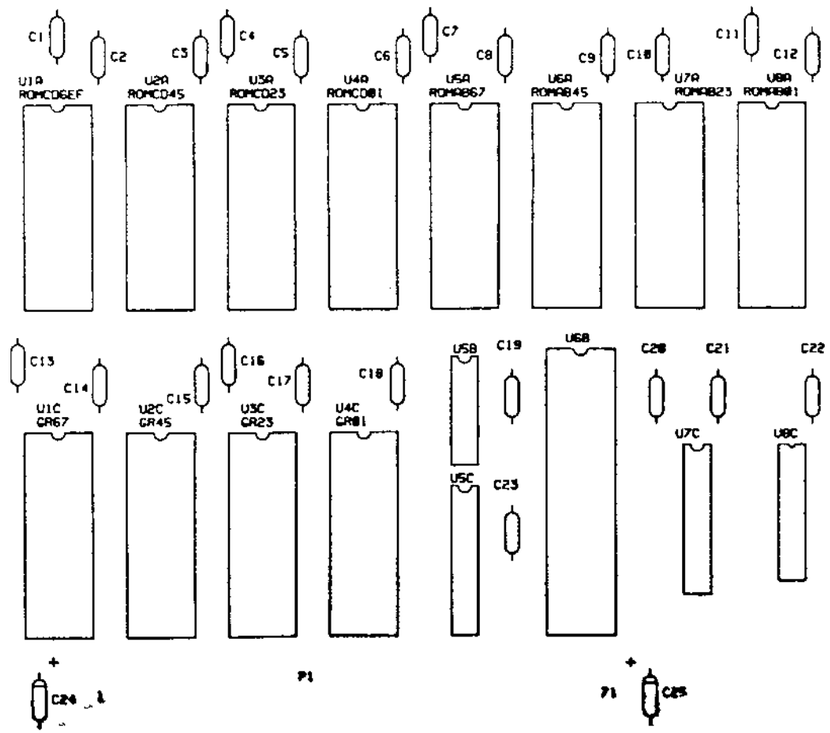

REV: Revisions due
to type errors
on 1/17/86.

M051-00114-A144

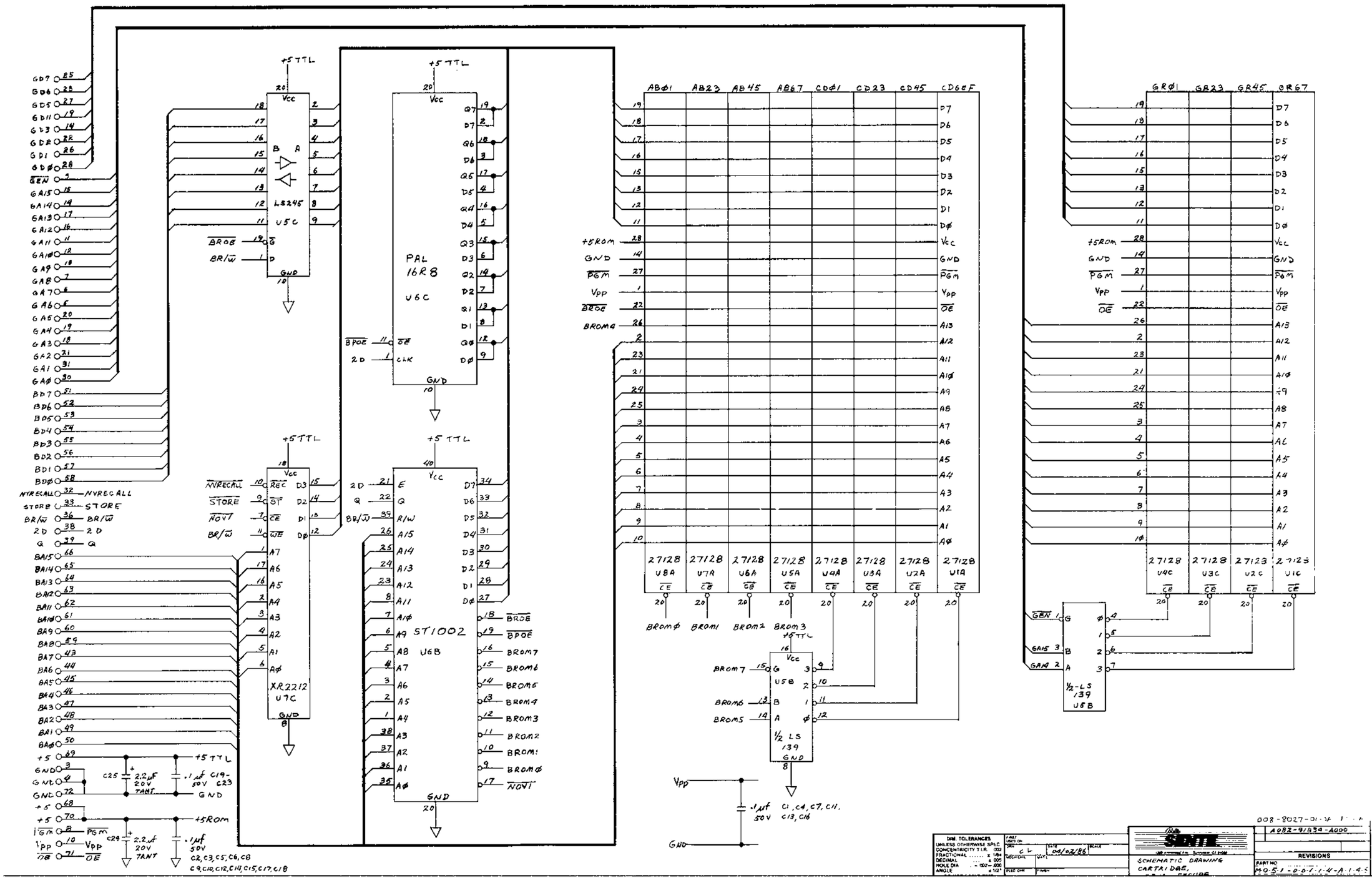

DIM. TOLERANCES
UNLESS OTHERWISE SPEC.
CONCENTRICITY T.I.R. .002
FRACTIONAL ..... ± 1/64
DECIMAL ..... ± .005
HOLE DIA ..... ± .002 ± .000
ANGLE ..... ± 1/2°

FIRST USED ON
DRN C L
DATE 04/02/86
SCALE
MECH CHK
MAT
ELEC CHK
FINISH

SENTE
SCHEMATIC DRAWING
CARTRIDGE,

008-8027-01-1A
A082-91834-A000
REVISIONS
PART NO
M0-5-1-0-0-1-1-4-A-1-4-5

FLOOR-CONTROL LAMP BOARD ASSEMBLY
PART NO. U006-08028-010A
M051-00E38-A010

CROSS REFERENCE LIST

DESCRIPTION	QTY.	DESIGNATION NO.	PART NOS.
FLOOR-CONTROL LAMP P.C. BD.	1		B007-08028-010A
CONN KK100 PCM M02A SQ. TIP	1	P1	U550-00086-0100
120 OHM 1/4W 5% CARBON	1	R1	100E-00005-0035
L.E.D.: RED MV5760	4	LED 1	119E-00001-0007

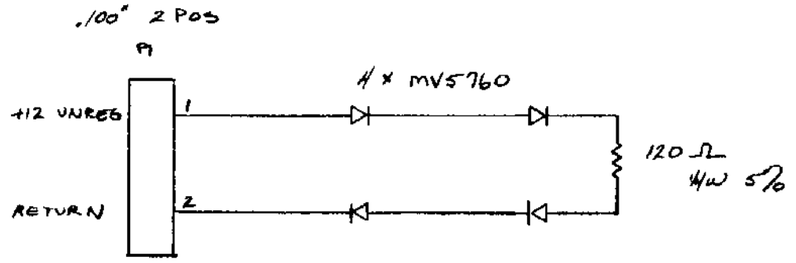

RELEASED BY: J.J. 2-11-86 M051-00E38-A011

ITEM	QTY	DESCRIPTION/MATERIAL	P/N REF

DASH NO. | NEXT ASSY NO.

APPLICATION

UNLESS OTHERWISE SPECIFIED DIMENSIONS ARE IN INCHES
TOLERANCES ON:
ANGLES = ± 1°
SURFACE FINISH ✓
X = ± .1
XX = ± .01
XXX = ± .005

MATERIAL

FINISH

DO NOT SCALE DRAWING

DRAWN BY DATE

CHECKED

ENGINEER

MFG. ENGINEER

PROJECT ENGINEER

Bally SENTE
1299 Anvilwood Ave. Sunnyvale, CA 94089

TITLE: FLOOR PLAY LAMP BOARD

SIZE C | DRAWING NO. 008-8028-01 | REV. A

SCALE | SHEET 1 OF 1

NOTICE TO ALL PERSONS RECEIVING THIS DRAWING CONFIDENTIAL. Reproduction Forbidden without the specific written permission of BALLY SENTE, INC., of Sunnyvale, California. This drawing is only conditionally issued, and neither receipt nor possession thereof confers or transfers any right in, or license to use, the subject matter of the drawing or any design or technical information shown thereon, nor any right to reproduce this drawing or any part thereof, except for manufacture by vendors for BALLY SENTE, INC and for manufacture under the corporation's written license, nor right to reproduce this drawing is granted or the subject matter thereof unless by written agreement with or written permission from the corporation.

D C B A

4 3 2 1