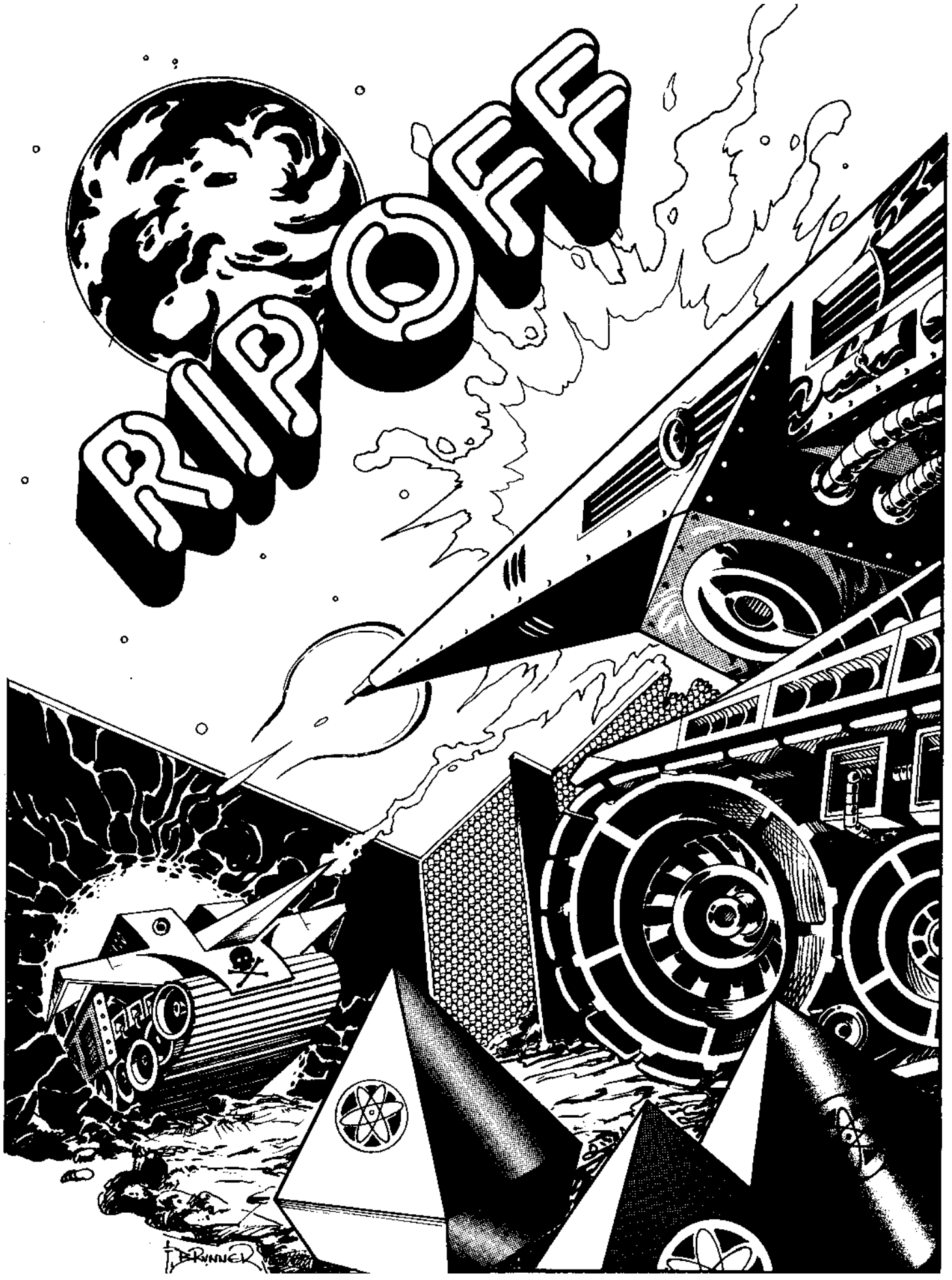
RIP OFF
BERNIER

CINEMATRONICS, INC.
1466 Pioneer Way
El Cajon, California, 92020

TELEX: CINEMAT 697891

CALL TOLL FREE: 800 854-6577

IN CALIFORNIA CALL: 714-440-2933

SALES: 8-5 (PST) WEEKDAYS

SERVICE: 7-5 (PST) WEEKDAYS

OPERATION AND MAINTENANCE

MANUAL

CINEMATRONICS, INC.
1466 PIONEER WAY
EL CAJON, CA. 92020

Copyright 1980
All Rights Reserved

CUSTOMER SERVICE PROCEDURES

It is the desire of Cinematronics, Inc. to provide efficient and courteous service should the need arise. We have a fully staffed Customer Service Department and encourage you to call our toll free number: 800-854-6577,78, for technical assistance between the hours of 7:00 A.M. and 5:00 P.M., California time, Monday through Friday.

In order to provide the very best service possible, the following procedures for ordering or returning parts must be followed:

1. All equipment ordered from Customer Service, whether in or out of Warranty, must be placed with a Distributor's purchase order, either by mail or verbally by telephone.

2. Advance replacement items may be obtained only during the term of the Warranty and when such items are available, using the same procedure as when ordering parts. When ordering a PCB, please include with your order the game serial number and the number of the PCB you wish replaced.

3. All items received as advance replacements will, after a period of thirty (30) days, become the property of the Distributor, with applicable charges applied in the event Customer Service has not received the defective item against which the advance replacement was made.

4. The Distributor must call this facility for an RMA number prior to returning any item. Please be prepared to provide us with the game serial number and the PCB number when requesting an RMA.

5. In all situations covered above, and in all other situations, the Warranty offered by Cinematronics, Inc. is appicable and should be fully understood.

6. Parts returned for service must be packaged so that no damage is incurred during the shipment. Cartons without a prominently displayed RMA number will not be accepted. Full documentation including game serial number, PCB number and reason for return must accompany parts. Ship prepaid to:

Cinematronics, Inc.
Customer Service Department
1466 Pioneer Way
El Cajon, CA 92020

800-854-6577 714-440-2933

WARRANTY

Cinematronics, Inc. warrants the goods to be free from defects in material and workmanship under normal use and service for a period of ninety (90) days from the date of delivery on all parts except switches, buttons, lights and fuses, for which the warranty period is thirty (30) days from the date of delivery. Cinematronics makes no representation or warranties concerning the goods whether express or implied by operation of law or otherwise, including those of merchantability or fitness for any particular purpose, or with respect of patent infringement, except as may be specifically made herein. Cinematronics limits its warranty obligations herein to the repair or replacement of such parts which have been returned to Cinematronics' plant at purchaser's expense and which examination shall disclose to Cinematronics' satisfaction to have been so defective and to the shipment of such repaired or replacement parts to the purchaser F.O.B. the shipping point.

This warranty does not apply to any Cinematronics product which has been altered or repaired by unauthorized personnel or service facilities or any products which have had the unit serial number altered or removed.

Upon acceptance of the goods, the purchaser agrees to assume all liability for damages and/or bodily injury by the purchaser or any other person and to hold Cinematronics, Inc. harmless from liability or claims arising from the use of the goods by any person. Purchaser further agrees to indemnify Cinematronics, Inc. from any liability, claim, cause of action or litigation resulting from the use or misuse of the goods by any person.

Parts returned for warranty service must be packaged so that no damage is incurred during the shipment. Full documentation and instructions must accompany returned parts. Parts must be shipped prepaid to:

Cinematronics, Inc.
1466 Pioneer Way
El Cajon, Calif. 92020

TABLE OF CONTENTS

Section	Title	Page
1	INTRODUCTION	1-1
2	INSTALLATION	2-1
3	GENERAL INFORMATION	3-1
4	VECTOR THEORY	4-1
5	THEORY OF OPERATION A. MONITOR B. CPU C. AUDIO	5-1
6	MAINTENANCE A. UNIVERSAL BENCH TEST B. TROUBLE SHOOTING FLOW CHART C. TROUBLE SHOOTING GUIDE	6-1
7	PARTS LISTS	7-1
	APPENDIX A Assembly Drawings. Schematics & Wiring Diagrams	8-1

LIST OF ILLUSTRATIONS

Figure	Title	Page
4-1	Graphical Representation of a Matrix	4-2
4-3	Line using Vector System	4-2
4-2	Non-linear Charging Voltages	4-3
5-1	CPU-Functional Block Diagram	5-6
5-2	Detailed Block Diagram	5-7

LIST OF TABLES

Table	Title	Page
2-1	Operation Option Switch Positions	2-2
5-1	CPU-Block Numbers and Component I.C.	5-8
6-1	Troubleshooting Guide	6-1

SECTION 1

INTRODUCTION

INTRODUCTION

RIP OFF is a one or two player action game that offers features guaranteed to capture and prolong player interest: an accelerating competitive level with a clearly visible object and a team competition option that allows players to combine scores as well as skills in defense strategy against a futuristic enemy.

The center of the playfield is occupied by a selectable number of triangular fuel cells that pulsate with radioactive energy. The player commandeers a land craft that turns left, right, accelerates and fires torpedo energy bursts activated by push-buttons mounted on the "bridge" control panel. All is quiet as the background audio repeats an ominous low frequency tone. Suddenly, alien craft enter in waves from the edges of the playfield attempting to attach their vehicles to the fuel cells and drag them off to restock their own dwindling supplies. The player maneuvers his land ship into position and fires a volley of torpedoes at the first invader, causing his vehicle to explode in a thunderous roar and a flash of light. A second invader retaliates by firing short range laser bursts at the defender ship while a third invader escapes, dragging off a precious fuel cell. The background audio quickens its pitch and tempo as another wave of sleeker, faster invaders attack and maneuver to rip off fuel cannisters — and the battle rages on!

GAME PLAY

There are three modes of play in RIP OFF: a) the attract mode; b) the one player mode; and c) the two player mode.

The attract mode is activated when power is applied. In the attract mode, triangular figures appear in the center of the screen. "Enemy" vehicles then appear in groups of three from various points on the edge of the screen and gravitate toward the triangles in the center. Upon reaching the triangle, the "enemy" vehicle comes to a full stop with its nose pointed directly at the triangle. The vehicle then makes a 180 degree rotation, attaches itself to the triangle, and drags the triangle off the screen toward a randomly selected point. When all the triangles have left the screen, the attract mode begins its cycle again.

The one player mode is activated when a coin is accepted and the player pushes the one player button. As play begins the first player's vehicle appears on the right side of the screen and moves slightly forward. The enemy vehicles then appear in pairs from various points on the edge of the screen and gravitate toward the player and the triangles. The enemies fire lasers while they move. The player scores points by either shooting the enemy or colliding with him before the enemy can shoot the player, collide with him or drag his triangle off the screen. When a player's vehicle is exploded, it reappears on the right side of the screen where it began.

When a player has sufficient points to achieve a bonus level, the enemies will appear three at a time instead of in pairs and their point value increases. Each bonus level increases the enemies' point value, as well as their ability to seek out and destroy the player. When all the triangles have been dragged off the screen, the game is over and the unit reverts to attract mode.

The two player mode is activated when two coins have been acceted and a player pushes the two player button. As play begins, the first player's vehicle appears on the right side of the screen and the second player's vehicle appears on the left. Both vehicles move forward slightly. Enemy vehicles then appear in groups of three and attack the players and seek to drag off the triangles. Players score points by colliding with the enemy vehicles or shooting them. No points are scored by shooting or colliding with the other player. Should the players'

ships collide, an explosion will occur and the players' vehicles will reappear at the points where they began.

In the two player operator selectable opponent mode, individual scores are displayed after each wave of attackers are destroyed or successfully leave the screen. In the team mode, the combined score of both defenders is displayed. At the end of the game, when all fuel cannisters have been removed, the individual high score for the day is displayed at the bottom of the screen and the high team score is displayed at the top.

A player achieves bonus levels in which the value of each invader vehicle is increased by the displayed amount of the bonus. There are six different types of invader vehicles, each wave becoming increasingly offensive and more difficult to destroy. The point bonus is in effect after six waves, the full compliment of ship types, have been destroyed. There are three similar craft in a wave, and in the two player mode twelve waves must be eliminated before bonus goes into effect.

There are no time units per game credit, and the battle goes on until all fuel cannisters have been "ripped off" from the playfield. The length of play is solely dependent upon the skill of the player — but it takes an experienced, practiced captain to hold off the swift invaders for long!

SECTION 2

INSTALLATION

SECTION 2

INSTALLATION

RECEIVING INSPECTION

Your game was shipped in ready-to-play condition. However, after removal of the shipping carton, a brief visual examination is suggested.

Naturally, you'll want to make note of any physical damage to the game cabinet and its external components for freight claim purposes. Considering the quality of the shipping carton, any damage to the exterior would indicate possible interior damage as well.

The interior of the game should also undergo a brief examination for: loose mounting hardware (check to be sure that the major components are still securely mounted); disconnected or loose wires, cables or harnesses; electronic devices loose in their sockets; etc.

At this time the game serial number should be logged. Please remember that the game serial number will be required if you need service from your distributor.

ELECTRICAL REQUIREMENTS

Unless specified otherwise, your game was shipped to operate at 115 VAC, 50/60 Hz. Two other voltage settings are possible. The power supply chassis has a table which shows the voltage options and fusing requirements.

A good earth ground is essential for the proper operation of this game or for that matter any electronic device. Problems with instability and erratic operation of computer-type devices can usually be traced to an ineffective ground system.

INITIAL ADJUSTMENTS

NOTE

When the game is connected to AC power, one of the game sounds may be heard. This is normal.

The audio level (volume) can be easily adjusted and THIS IS ACHIEVED BY ROTATION OF THE VOLUME POT LOCATED ON THE COIN DOOR. The audio level should compete with other machines "on the floor" to maximize play time.

Display brightness is another easy adjustment. The monitor assembly has several adjustments, but the brightness control is the only one which does not require a "screwdriver" for rotation. Keep the brightness at the correct level for appeal.

OPERATOR OPTIONS

The option switch is located on the logic or game board. It is not necessary to remove the board from the cabinet to set the options. In fact, the option switch and audio control can be reached easily through the coin door opening. Table 2-1 will assist you with your selections:

LOGIC BOARD OPTION SELECT TABLE

The following chart diagrams the switch settings of the option switches for "RIP OFF". The 7 station switch is located at position E-2 on the logic board (refer to logic board layout in appendix).

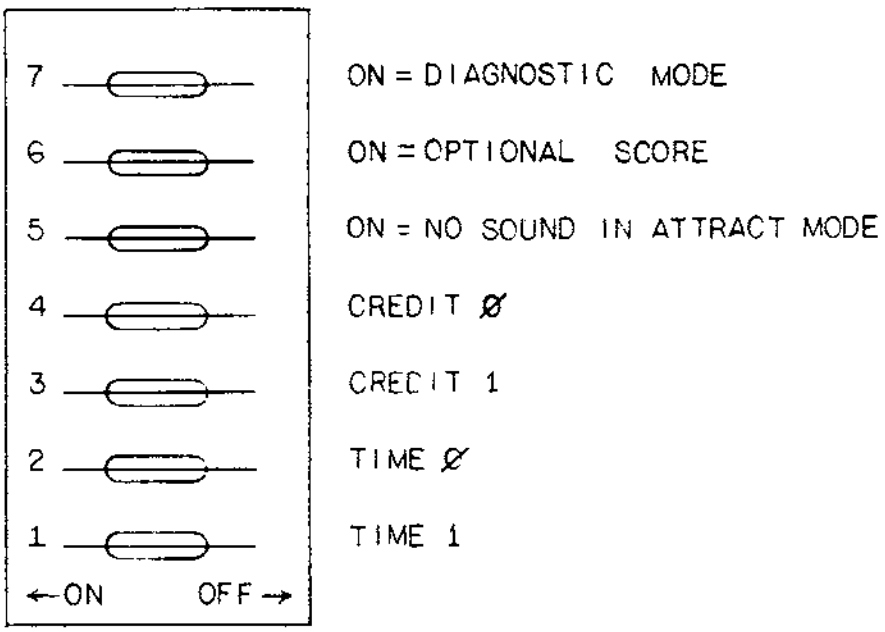

CREDIT 1	CREDIT Ø	CREDITS PER COIN
ON	ON	1/1
ON	OFF	3/2
OFF	ON	1/2
OFF	OFF	3/4

TABLE A

TIME 1	TIME Ø	UNITS PER PLAY
ON	ON	12
ON	OFF	16
OFF	ON	4
OFF	OFF	8

TABLE B

TABLE 2-1

Switch Descriptions

7 — Generates a test pattern for alignment purposes.
6 — Displays individual scores for each player or one combined score.
5 — Allows motor audio in attract mode.
4,3 — Credit per coin selectors defined in Table A.
2,1 — Fuel cell selectors defined in Table B.

SECTION 3

GENERAL INFORMATION

SECTION 3

GENERAL INFORMATION

Your Cinematronics game is designed much the same as conventional video games. The major exception is the use of an alternate means of visual display ... the patented Vectorbeam tm* monitoring system.

However, the game is built of the same basic building blocks as any other video game:

The Power Supply provides all necessary voltages for each separate electronic assembly as well as the AC lighting required throughout the game.

The Central Processing Unit contains circuitry to strobe and interpret all input functions which include the player control panel switches and all coin and credit information and generates all the digital signals used to provide the visual display and control the audio effects. It also contains all the software (i.e., machine language and game personality memory) needed to control the game operation and to generate the proper vectors for the display.

The Audio Board consists of a noise generator and wave shaping circuits which produce different game sounds on command from the CPU logic board.

The Vectorbeam tm* Display Electronics is the final form of interpretation of the CPU's calculations. The CPU logic informs the display electronics unit of information regarding line length and line placement on the CRT. This is accomplished with two twelve-bit words each for horizontal and vertical deflection, and a number of other controlling signals for the cathode drive circuit and switching of the deflection circuits.

The major difference between the vector generator and raster scan type monitors is the means by which the cathode beam is directed (deflection) across the screen.

In the raster scan type of display, the electron beam from the cathode to the anode of the CRT is constantly deflected (scanned) across the face of the CRT in a series of horizontal lines that trace from the upper portion of the screen to the bottom in a synchronous pattern. Vertical information is formed using a matrix-type pattern of mathematically possible illumination points on the face of the CRT. If the cathode current is increased at these points on the screen in matrix-type patterns (similar to placing dots on a piece of graph paper where the lines intersect) coherent video in the form of shapes and alpha-numerics to form game backgrounds can be displayed.

The vector generator takes a slightly different approach to cathode beam deflection. The results are a much higher degree of resolution and much smoother motion across the screen. Rather than using a constantly scanning cathode beam, the beam is directed only to points of eventual illumination, using a vectoring form of programming rather than a matrix approach. Basically, the cathode beam is directed between two determined points, and illuminates the entire path of phosphors between these two points, unless blanked by stopping cathode current (i.e., when the beam moves from one star to another on your screen). The ability to illuminate the entire path of phosphors crossed by the electron beam, in any direction desired, (which is not possible in a raster scan system) creates a

much higher degree of resolution than can be found in a raster scan system while at the same time creating a much greater number of angle possibilities. This is also supported by the ability to accommodate two twelve-bit words of information, twelve each for vertical and horizontal deflection, and the fact that there is no background illumination from a constantly scanning beam when brightness is turned up. The higher degree of resolution combines with the totally blackened background generating an appearance of depth not found in a raster scan system.

Another major design difference is the fact that no sync. signals are needed to produce vectors on the CRT. This greatly simplifies the hardware design of the system, and therfore the understanding of the theory of operation, both the CPU logic and the display electronics.

Vectorbeam tm is Cinematronic's service mark for video game repair and education services.

SECTION 4

VECTOR THEORY

SECTION 4

VECTOR THEORY

In order to understand the basic concept behind a vector generated display, it is important to have a basic knowledge of vector theory.

As mentioned in the general information section of this manual, the raster scan display uses a matrix type display pattern. A graphical representation of a matrix is shown in Figure 4-1.

For example, to produce a line on the CRT with a matrix-type pattern, the appropriate intersection points of horizontal and vertical lines are illuminated. The calculations which select these points are made on the logic board, and converted into video information for the monitor to digest. Although there are spaces between the illuminated points, the illusion of a solid line is made by your eyes, and the resolution is determined by the number of available horizontal and vertical lines in the system, and the speed of the sweep.

In the vector display system, there are no horizontal and vertical lines (no sweep) or sync. A line generated using a vector system is shown in Figure 4-2.

A line is drawn by programming a beginning and ending point of the line to be drawn, and forcing the cathode beam to travel between these two points, illuminating the entire path of phosphorus on the CRT. The angle of the line, the position of the line, and the length of the line are determined simultaneously, and simply, by selecting the proper voltage levels for the beginning and ending points of the line.

This is accomplished by the two twelve-bit codes (words) applied to the DAC-80s on the display board. The DAC-80 will produce a different voltage level at its output for each possible combination of input levels (of which there are 4096 possiblities for each 12 bit word.)

It is also important to remember the function of the LF 13331 analog switch and its output RC network. Because we are dealing with reactive components in C101 and C201 on the display board the charging voltages found are non-linear by nature. (See figure 4-3.)

Therefore, when a line appears on the CRT, it is actually only part of the entire path taken between the beginning and ending points of the vector (C-D). The section of A-B is chosen as the most linear portion of the charge curve, and is illuminated.

Sections C-A and B-D are blanked at the cathode, and points A and B chosen by controlling the analog switch on the display board. These calculations are all performed on the CPU logic board.

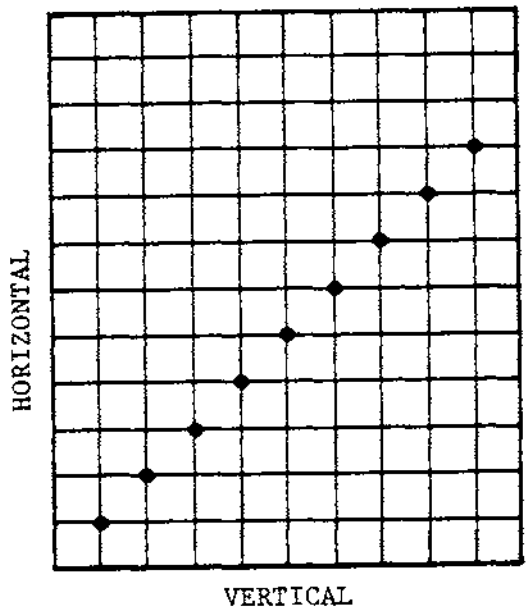

Figure 4-1. Graphical Representation of a Matrix

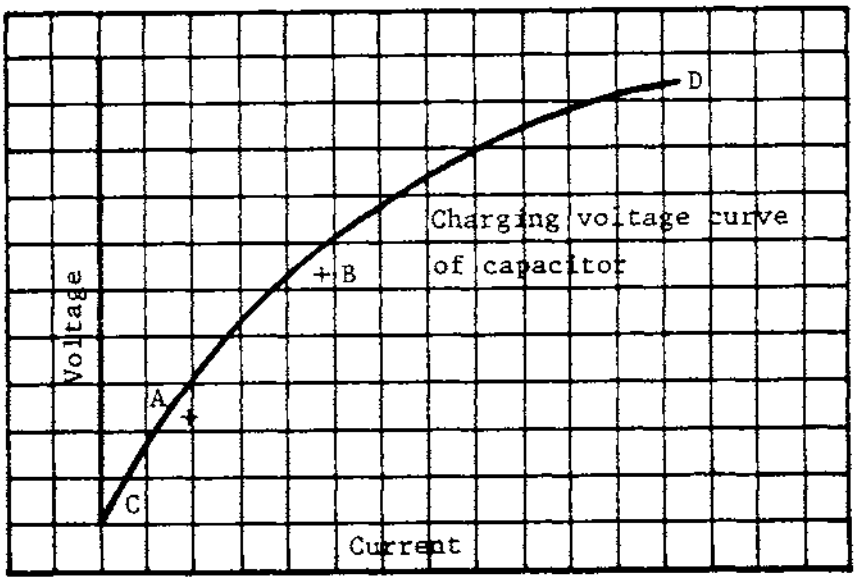

Figure 4-3. Non-linear Charging Voltages

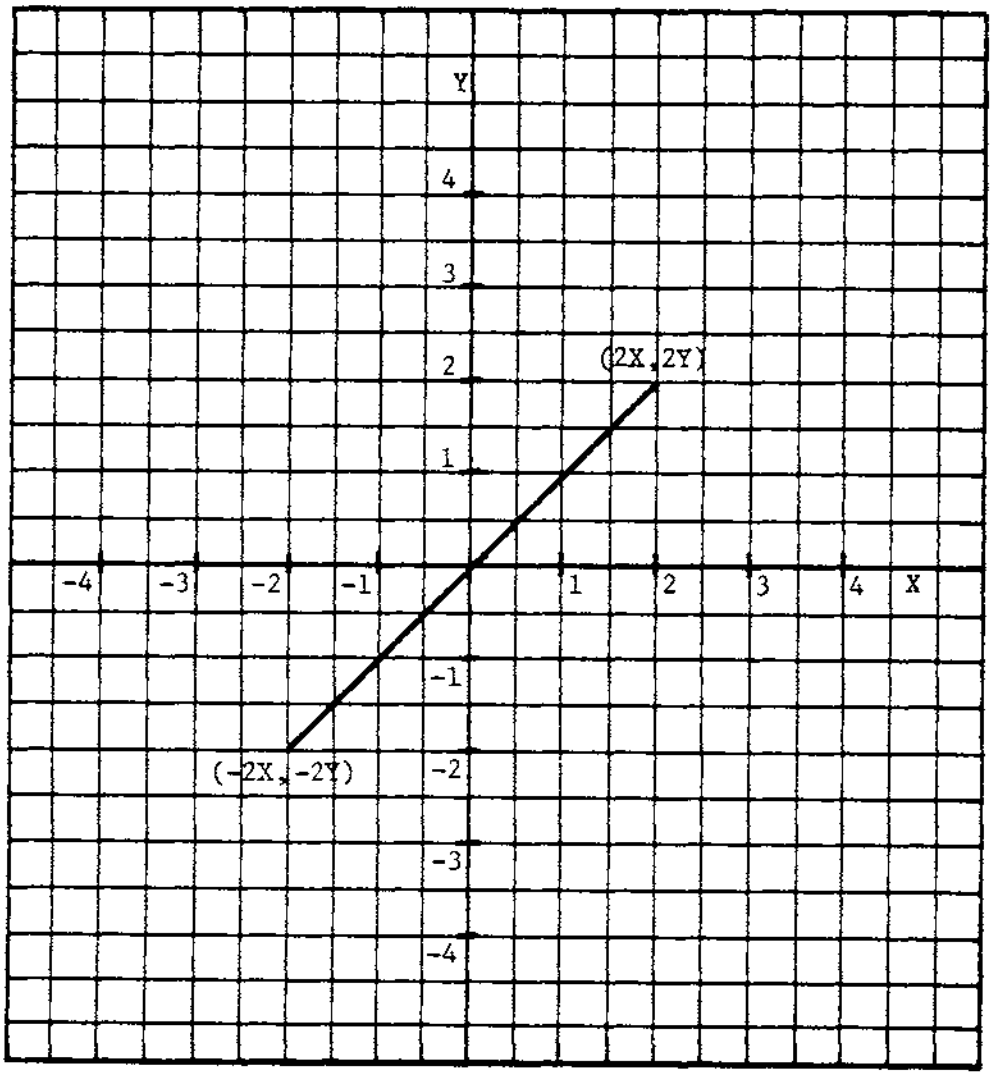

Figure 4-2. Line using Vector System

When a line appears on the CRT, it is actually only part (section A-B,) of the entire path taken between the beginning and ending points of the vector (section C-D). Section A-B is chosen as the most linear portion of the charge curve, and illuminated.

Sections C-A and B-D are blanked at the cathode, and points A and B chosen by controlling the analog switch (V-1) on the display board. Again, these calculations are all performed on the CPU logic board.

SECTION 5

THEORY OF OPERATION

SECTION 5

THEORY OF OPERATION

GENERAL DESCRIPTION

This section describes the principles of operation of the major circuit functions of the Cinematronics Video Arcade Game. The system's general functional description is followed by detailed circuit schematics which are included as Appendix A. The schematics used in this manual are similar in nature to those used by most industrial electronic firms.

MONITOR DISPLAY

The Vectorbeam tm monitor is unlike the conventional TV monitor in that it displays vectors (lines) generated from X-Y coordinates recieved from the logic board. The horizontal points are X (width) and the vertical points are Y (height). The X and Y logic signals originate from the logic board.

The Vectorbeam tm monitor can be divided into two basic sections: one is the deflection amplifier and the other is the voltage and cathode drive circuits.

The deflection amplifier can be further divided into two identical channels: one for the vertical deflection and one for the horizontal deflection. The operation of the vertical channel will be discussed; however, the same theory of operation pertains to the horizontal channel.

Digital information, in the form of a twelve-bit word, is applied to the input of the DAC-80 digital to analog converter (U101) on pins one through twelve. The most significant bit is applied to pin one, and the least significant bit is applied to pin twelve. The DAC-80 makes the necessary conversion from digital signals to analog signals which are outputted as analog voltage signals on pin fifteen (proportional in level depending on the input word applied). The result is a positive and negative voltage signal about its reference voltage. Remember, there is no "sync" signal present, and the signal is not true video as seen in raster scan monitors.

From the DAC-80 the analog signal is then sent to a high-speed analog switch, (U1). The analog switch has two parallel inputs for the display signal, and two controlling inputs which select one of two outputs from the switch. An R.C. network, which is used to create line length and line position on the screen is found at the outputs.

Output fifteen from the switch routes the analog signal through a 5K potentiometer (R102), a 10K resistor, (R103) and to the input of U102 op-amp. The time constant developed by these two resistors and the capacitor (C101) determine the length of the vector line seen on the screen. Adjusting the potentiometer will adjust the length of the vertical lines seen on the screen.

Output ten from the analog switch routes the signal directly to the input of U102 op-amp, and the resulting time constant of the op-amp input impendence and the capacitor C101 determines the position on the screen of the vector line.

Op-amp, U102, serves a dual purpose: it acts as a buffer between the deflection amplifiers and the analog switch, as well as an "edge gain" amplifier (i.e., height).

At the output of U102, there is a resistor diode network consisting of R105-R110, and CR101-CR104. This resistor diode network is used to compensate for the non-linear characteristics of the CRT near the edges of the screen. If this circuit were not used, any object displayed on the screen would increase in size as it moved closer to the edges of the screen. Potentiometer (R109), adjusts the height of the pictures.

From the wiper of R109, the signal proceeds to Q101, which is the first stage of deflection amplification. Q103 is emitter coupled with Q101 to provide a degenerative feedback loop from the yoke. Q102 is used to provide a constant current source to both emitters.

At this point, the deflection circuit can again be divided into two identical circuits. One circuit, which controls the lower half of the screen, is comprised of Q104, Q106, Q108, and Q110. The other circuit, which controls the upper half of the screen is comprised of Q105, Q107, Q109, and Q111. **

Q104, Q108 and Q110 are three stages of amplification, while Q106 is used as current limiting protection for Q108 and Q110. The same holds true for the other configuration of Q105, Q107, Q109 and Q111. R124 through R129 are used as a current divider network for the yoke.

R122, R123, and C102 form a RC network, which compensates for any counter EMF that may develop by the expanding and collapsing of the deflection coil's electromagnetic field.

The high voltage and cathode circuitry is the second section of the monitor. This section also contains the necessary voltage regulation to power the ICs located on the display board as well as develop the high voltage.

U4 and U6 provide plus 15V and minus 15V respectively to power the DAC-80s and the TL081 op-amps on the display board.

U3 and U5 provide plus 18V and minus 18V used in the high voltage transformer (T-1) and oscillator (the oscillator circuit is necessary because there is no horizontal sync. used to develop the high voltage pulses.) The oscillator circuit is comprised of primary windings, Q4 and associated discreet components.

The high voltage 18KV is developed by T1 secondary windings, and the high voltage tripler.

The intensity and beam blanking control circuitry is composed of U7, Q1, Q2, Q3, Q8 and associated components. The cathode voltage rides at +88. The beam is turned on by a more negative voltage. At the anode of CR4 negative pulses can be seen, these are the beam on pulses. For normal intensity the pulses will go down to approximately 40V, for double intensity, 20V. Pins 3 and 4 of U7 is the normal intensity control gate which receives information from the CPU. Pin 1 and 2 is the double intensity control gate. When a Hi going Lo signal is on pin 3 of U7 pin 4 will be a Lo going Hi turning on Q3 on the Hi transition. Q3 acts as a switch connecting the series network of R11, R9 and R10 to ground creating a voltage divider network. R11 is the manual intensity control. When 2 of U7 goes Hi Q1 turns on for the duration of the pulse connecting just R9 and R11 to ground, thus lowering the voltage at the anode of CR4 lower still because of the lower resistance, than with normal intensity. Q2 is used as a switch to enable Q1 and Q3. Its purpose is to shut off the beam when the power is turned off. Q8 is a beam on delay to prevent phosphor burns if someone was to unplug and plug in the machine rapidly.

R111 is the brightness potentiometer, which adjusts the amplitude of the negative spikes used for brightness and intensification.

** In the horizontal section of the deflection amplifier, Q204, Q206, Q208 and Q210 control the left hand side of the screen, and Q205, Q207, Q209, and Q211 control the right hand side of the screen. By dividing the screen in this manner, four quadrants of deflection area have been developed (refer to Vector Generator description).

CPU BOARD

The processor hardware can be broken down into five basic functional blocks as shown in Figure 5-1. The arrows indicate the possible data flow directions between the various blocks. The ALU and Control block are the main components of the processor while the Memory and I/O blocks may be thought of as merely peripherals. Figure 5-2 is a detailed block diagram of the processor. The numbers in each block correspond to the entries in Table 5-1, which lists the IC numbers of the main components of each functional block.

The following is a brief description of each block shown in Figure 5-1. The numbers beside each functional block name are the numbers in Figure 5-2 which correspond to a particular function.

RAM (6)

The RAM is implemented with three read/write static memories configured as a 256 x 12 bit block. Data can be transferred to or from this memory via the ALU block. The processor uses this RAM as a scratch pad.

ROM (10)

The ROM is configured as an 8K x 8 bit block of memory. These memory locations contain the program instructions and/or data. It is accessed via the processor control unit.

I/O 19, 17, 18

The I/O block consists of 8 output lines implemented with a bit addressable latch, 24 input lines implemented with data selectors, and two 12 bit registors which are connected to the X Y display deflection circuits via D/A convertors.

Arithmetic Unit 1,2,3,4,5

The arithmetic unit performs all the arithmetic processing for the system. It consists primarily of two 12 bit accumulators, an arithmetic logic unit and various data selectors. The accumulators can function as temporary storage registers for arithmetic functions upon the data in the accumulators. The data selectors are used to select the various sources of data which will be processed.

Control Unit (15,16,14,7,8,9,11,12,13)

The control unit is the heart of the processor. It performs all instruction decoding operations and generates all the necessary control signals which the rest of the hardware requires to function correctly.

The following is a discussion of each block shown in Figure 5-2.

1. Accumulator Selector

The accumulator selector consists of 3 quad data selectors. They are used to select the output of either the primary or secondary accumulator for processing by various other sections of the systems.

2 & 3 Primary and Secondary Accumulators

The two 12 bit accumulators are implemented with quad bidirectional shift registers. The primary accumulator consists of S4, P4, M4. The secondary accumulator consists of T4, R4, N4. All data manipulation in the processor is accomplished using these two accumulators. All output data flows through these registers.

4. Arithmetic Logic Unit (ALU)

The ALU is used to perform all necessary arithmetic functions within the processor. The ALU is implemented using three 24LS181 (N6M6L6) function generators, three 74LS85 (N9,M9,L9) 4 bit magnitude comparators, and a 74S182 (L4) look ahead carry generator. The data which the ALU manipulates can come from four different sources. The first source is the contents of the accumulators via the accumulator selector. The second and third sources are the ROM and RAM data outputs via the ALU data selector (N11, M11, L11) and the fourth source is the external input selector (E4, D4, C4).

5. Data Selector

The data selector is used to read data into the ALU from either the RAM or ROM memory. Note that the ROM data is only 8 bits wide while the RAM data is 12 bits wide.

6. RAM Storage

The system RAM consists of three 9101C high speed static memory chips connected as a 256 x 12 bit block. The block is 12 bits wide in order to allow the contents of an accumulator to be stored. The processor uses the RAM as temporary storage of program variables, data pointers or any other data of a dynamic nature.

7. RAM Address Selector/Register

The output of this register is tied directly to the address lines of the RAM. It consists of a multiplexer which routes address data from either the ROM or RAM locations to the RAM address lines. The capability to use RAM data to select RAM addresses is the basis for the indirect addressing mode of the processor.

8. Page Selector

The page selector is used to latch the high order 4 bits of a RAM access instructions.

9. ROM Data Register

The register is used to temporarily hold data from the ROM during an instruction fetch.

10. ROM Memory

The ROM memory consists of the actual memory chips plus a data selector and latch circuit. The latch is used to improve the memory access time during a two byte instruction fetch by allowing one byte of the instruction to be latched while the RAM address lines are decoded for the other byte. The data selector can then be used to rapidly access both bytes of the instruction by switching between the latch and memory outputs.

11. Instruction Register

The instruction register is a latch which holds the current op code as read from ROM. Its output is tied to the instruction decode circuitry which in turn generates the necessary signals to execute the instruction.

12. System Sequencer

The system sequencer is used to decode an instruction op code and to generate the appropriate timed sequence of signals which execute the instruction. The op code is decoded by using it as the address data to a set of decoder ROMS. The outputs of the decoder ROMS are then synchronized with the system clock and used to control the various system functional blocks.

13. Line Length Counter

The line length counter is used during the process of drawing a vector to control the length of a vector, by turning off the beam at a pre-determined time after the vector is intiated. The counter is loaded with a value from a line length ROM and then counts up until it overflows which in turn generates a signal to indicate the vector has been finished.

14. Program Address Selector

This selector is used to provide the address data to the program ROM. It selects either the program address counter output or the accumulator selector output and routes this data to the ROM address lines. The ability to use the accumulator contents as address data allows the program to randomly access data tables stored in the ROM or to compute a branch address after a conditional test.

15. Program Address Counter

This is a 12 bit counter whose output defines the next location in ROM to be accessed. It is normally clocked sequentially to step through a program. However, it can be loaded with data from the program address register which is how the jump instructions are implemented.

16. Program Address-Register

This register is a latch used for temporary storage of an address which will be loaded into the program counter during a jump instruction. The input data to this latch can come from either the program ROM or the scratch-pad RAM.

17. Input Selector

The input selector is used to read the state of one of the 24 input lines into the selected accumulator. There are 16 primary inputs and 8 secondary inputs. During an input instruction the upper 11 bits of the accumulator are set to zero while the least significant bit reflects the state of the input line. All input lines have pull up resistors on them so that they will read high if they are left unconnected.

18. Output Selector

The output selector is a bit addressable latch used to control the 8 output lines. During an output instruction the selected output line is set to the complement of the least significant bit of the accumulator. The output lines are used to control the audio board, display intensity and the mechanical coin counter.

19. Display Registers

The display registers are the interface between the processor and the display driver circuits. These registers are latches into which the contents of the accumulators can be stored. The outputs are tied to D/A converters which provide the input voltage to the display deflection amplifiers.

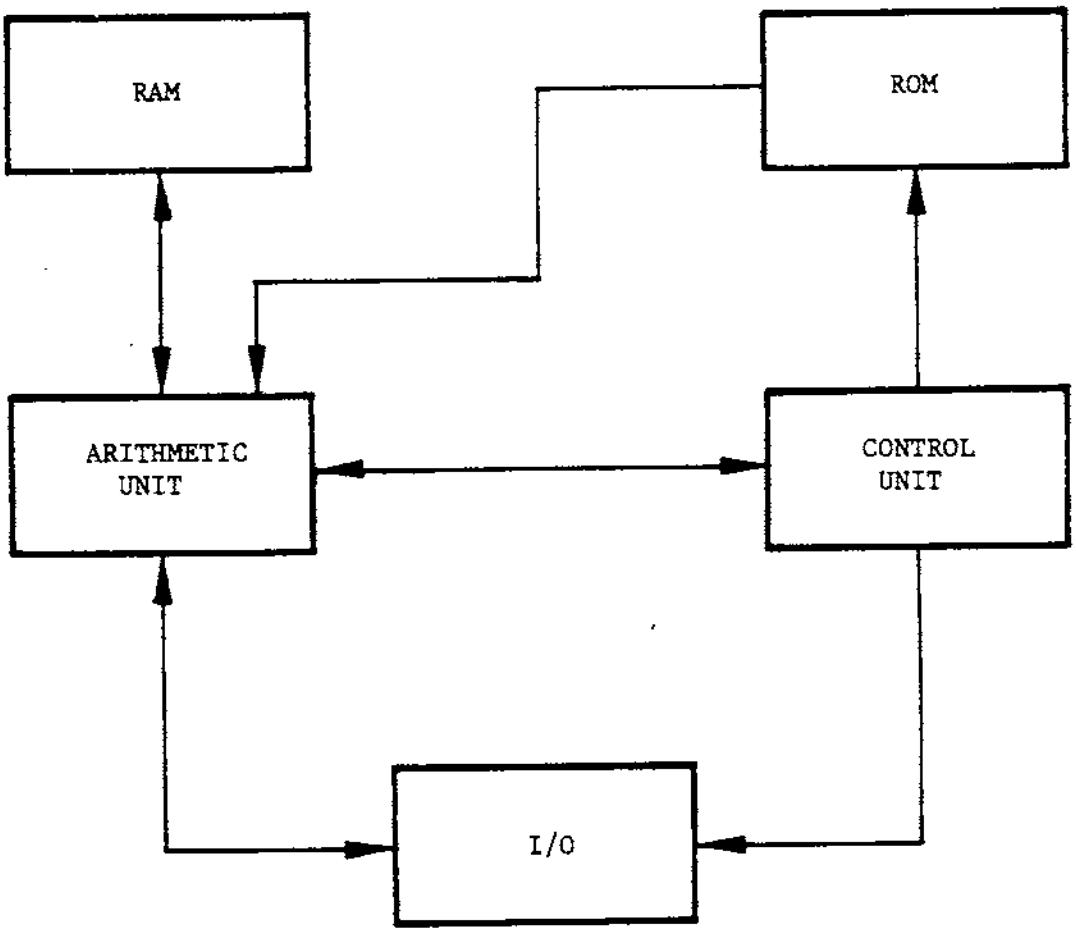

Figure 5-1. Functional Block Diagram

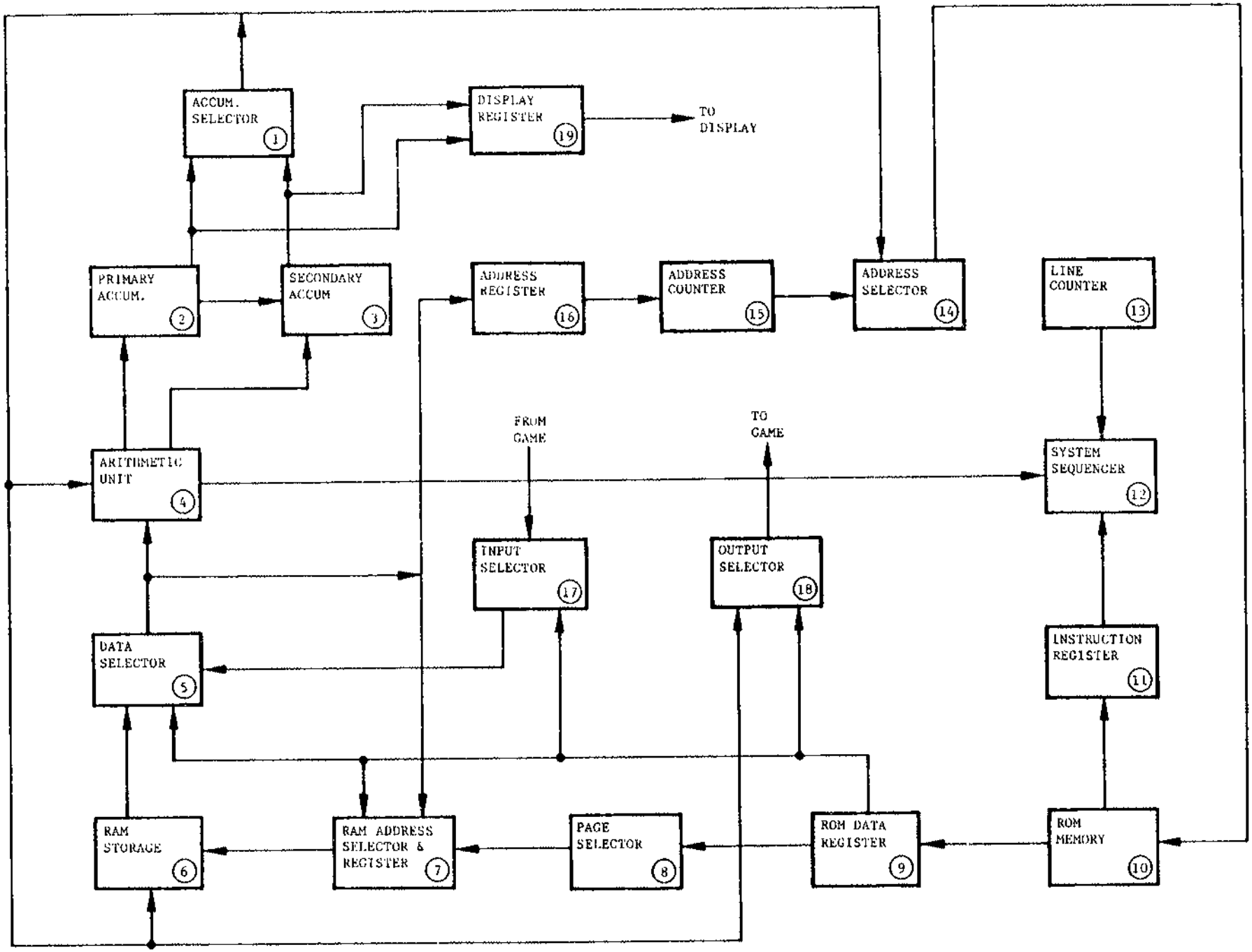

Figure 5-2. Detailed Block Diagram

TABLE 5-1. BLOCK NUMBERS AND COMPONENT I.C.

1. T-2, R-2, N-2
2. S-4, P-4, M-4
3. T-4, R-4, N-4
4. N-6, M-6, L-6, N-9, M-9, L-9
5. N-11, M-11, L-11
6. N-14, M-14, L-14
7. J-12, I-12
8. H-12
9. S-13
10. U-7, R-7, T-7, P-7, U-9, T-9, U-11, T-11
11. T-13
12. A-8, G-10, F-10, G-14, F-14, E-14. D-14, C-14
13. E-6, D-6, E-8, H-8, G-8, F-8
14. S-9, R-9, P-9
15. S-11, R-11, P-11
16. P-13, R-13
17. E-4, D-4, C-4
18. F-2
19. S-2, R-2, M-2

GENERAL INFORMATION

The following section describes the operation theory of the game audio board. The appendix contains block diagrams of the audio section and includes the various curcuit elements that generate each particular sound. Each block will be described in theory along with test techniques following to enable effective troubleshooting of each sound.

The appendix of this section also contains some basic hints on testing and troubleshooting and should be read prior to isolating a problem on the board.

An asterick (*) in the left hand margin of a section indicates a detailed discussion of a circuit that will be used, but not discussed, in latter parts of the section.

*INPUT CONTROL CIRCUITRY (block 1)

IC25 is a Schmitt-Trigger inverter package that "cleans up" digital information arriving at connector J4 on pins 11, 12, & 13 (J4-11, 12, & 13). The CPU board controls all sound gereration by supplying digital data pulses through 16 pin connector J4. IC8 and IC9 latch this control information on the board as follows:

IC8 (74LS164) is an 8-bit serial-to-parallel shift register of which only 6 output bits are used (A-F). Data in the form of a bit stream marches from connector J4-11 through IC25 and into pin 2 of IC8. Pin 8 receives clock pulses from the CPU via J4-12. Each pulse causes a single bit of data present at pin 2 to be transferred successively down the line to outputs A thru F.

When the six output ports are filled, IC9 (74LS377) swings into action. the output of IC8 is tied to the inputs of IC9 (1D-6D). When IC9 receives a load pulse on pin 11 thru connector J4-13, the data present on each of its inputs is transferred straight across to its output ports (1Q-6Q). Now data which entered on one channel thru connector J4-11 is available for use in the 6 channels of latch IC9.

*TEST PROCEDURE — input control circuitry

To verify proper operation of IC25, disconnect 16 pin ribbon connector J4 and decrease volume. Probe IC25-8 with logic probe, scope, or volt meter. It should read "high" or 2.4-5 volts DC (logic 1). Repeat for pins 10 & 12 of IC25.

With a test lead, ground IC25-5. the output of IC25-8 should now read "low" or 0–+.7 volts DC (logic 0). Repeat for pins 10 & 12 while grounding 3 and 1.

To verify proper operation of IC8, load all "lows" into its output ports by tying IC8-2 to ground. With another test lead tap IC8-8 about a dozen times. Outputs A-F should now all read low. At this point, tap IC9-11 with the ground lead. Outputs 1Q-6Q of IC9 should now all read low.

Repeat the above procedure, but remove the ground lead from IC8-2. This should load "highs" into all output ports and completes the test.

DIGITAL TO ANALOG CONVERTER (DAC) (block 2)

Output ports 1Q, 2Q & 3Q of IC9 drive digital to analog conversion circuitry consisting of IC10, IC19, D1 and various resistors (refer to Blk. 2). The circuit converts the various combinations of highs and lows on IC9-2, 5, & 6 into an analog voltage level at the output of IC19. This voltage then drives circuitry to produce a background sound of increasing frequency as the level of IC19-6 decreases.

TEST PROCEDURE — digital to analog converter

To test the DAC circuitry we will simulate the CPU by inputing various digital codes into pins 1, 3, & 5 of IC10 (7406). This chip is used as a simple switch as illustrated in the figure below:

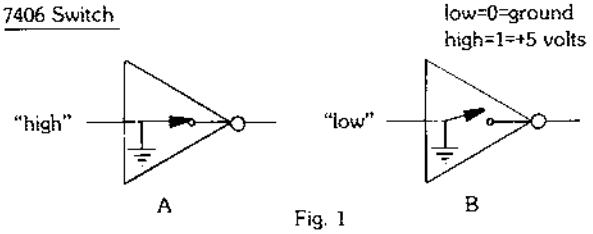

Fig. 1

When a logic 0 or low is placed on the input, the 7406 "switch" is open and sinks no current. Placing a high closes the switch and connects the output pin to ground.

D1 (1N5240) is a Zener diode & should always read +10 volts on the cathode.

Load all highs into IC9 as described in the previous section. This puts the digital code 111 on the inputs of IC10-1, 3, & 5. With a test lead, ground successively pins 1, 3, & 5 to produce the codes indicated in the table below. These codes generate voltages on the output of summing amp IC19 as listed:

IC10 — 1	3	5	IC19-6
1	1	1	Approx. 0 volts
0	1	1	-2.5volts ± 20%
1	0	1	-1.3 volts ± 20%
1	1	0	-0.7 volts ± 20%

table 1

As each input of IC10 is tied low, its output should vary from 0 volts to approximtely 5 volts. If not, IC10 is defective. IC19 is a summing amplifier that converts currents from the resistor network R25-R30 into output voltages on pin 6. Should IC19 fail the test, lift diodes D6 & D8 out of circuit & repeat the procedure. Replace IC19.

BACKGROUND SOUND (block 2)

The background sound circuit is comprised of 3 main elements: a voltage controlled oscillator (VCO), mixer & level translator, and a gated octave adder (refer to Blk. 2). These elements produce a repeating tone burst of accelerating pitch & frequency.

*VCO

There are two identical voltage controlled oscillators consisting of IC20, IC21 and assorted elements (refer Block 2). The sole difference is the idling frequency and the IC21 circuit is discussed:

The output of IC21 on pin 6 is a rectangular wave pulse train swinging between +10 volts & -10 volts. With the output of the DAC circuit IC19-6 at 0 volts, the variation on pin 3 of IC21 is limited to the voltage drop across D9 (+0.7 volts) during the positive swing and the drop across D8 (-0.7 volts) during the negative swing. At the positive swing, IC21-6 is saturated at+10 volts. Current now begins to flow thru R80 (43K) and attempts to charge C31 (.1mf) to this +10 volt level. Pin 3 is limited to +0.7 volts by diode D9, and as the charge of C31 passes this level, the output of IC21 flops to -10 volts.

Now diode D8 comes into play. With -10 volts at IC21-6, D8 forward biases and limits the level at IC21-3 to -0.7 volts. Capacitor C31, which had just charged to a little over +0.7 volts, sees the -10 volt level at IC21-6 thru R80 and begins to discharge toward -10 volts. As it passes through -0.7 volts, IC21-6 flops back to +10 volts, and the process repeats itself. The output of IC21 oscillates between +10 volts and -10 volts at a frequency determined by the time required for C31 to charge & discharge between +0.7 volts and -0.7 volts, the voltage limits imposed on IC21 pin 3.

If voltage excursion limits on IC21-3 were instead +0.7 volts to -2.5 volts. It would require a longer period of time for C31 to charge & discharge through this range. Since the output of IC21 does not flop until a limit is reached, this longer charging period implies a lower frequency of oscillation for IC21. Thus the name voltage controlled oscillator: by varying the lower limit voltage from -0.7 volts to -2.5 volts, the frequency of oscillation varies from a fast to a slower rate.

The lower limit is determined by the voltage at the anode of D8. The output of the DAC circuit is connected to the VCO at this point. The CPU can therefore vary the frequency of IC21 by providing various digital codes to IC10 pins 1, 3, & 5.

TEST PROCEDURE

The output of IC21-6 will measure approximately 14 volts AC on a voltmeter. A completely dead VCO usually indicates a defective OP amp (IC21 or IC20). The VCO circuit will operate, but not correctly, with defective diodes D8 or D9. Verify with the OHM meter out of circuit.

Load all highs into the input control circuitry. Perform the test in Table 1 and observe

IC21-6 on an oscilloscope. Frequency should decrease.

*MIXER & LEVEL TRANSLATOR

Transistor Q10 and its associated resistors (refer block 2) form the mixer and bipolar to TTL level translator. The two oscillators consisting of IC20 and IC21 generate voltage swings between +10 volts and -10 volts that are too large to be fed directly into IC22. It is also necessary to mix these large voltage swings of different frequency into a composite signal and then translate this composite level into a TTL compatible range (see appendix). Resistors R78 & R81 (20K) sum the outputs of the VCO's into the voltage divider comprised of R83 (20K) & R84 (10K). Transistor Q10 (2N3904) converts the level at its base into pulses between 0 volts and +5 volts for the octave generator, IC22.

*TEST PROCEDURE — mixer and level translator

Observe pulses on the collector of Q10 with an oscilloscope, or read approximately 2.0 volts AC on a volt meter. If not present, replace Q10.

*GATED OCTAVE ADDER

The final stage of background sound generation is accomplished by IC22 (74LS393). This chip is driven by the VCO and level translator and its four outputs are mixed together by resistor network R86-R90 to produce the sound waveform.

Outputs A-D are squarewaves that actually count the clock pulses arriving at pin1 and represent these pulses as a four bit binary code. When the chip enable on pin 2 is held high by the input control circuitry latch IC9, IC22 is disabled and pins 3, 4, 5, 6, all go low. No sound is generated with pin 2 held high. When pin 2 is held low by the CPU, the background sound is enabled. Outputs A-D begin pulsing and produce a complex voltage wave form at the junction of R89 & R90. The sound is coupled to the output pre-amp IC14 via resistor R91 & C32.

*TEST PROCEDURE — gated octave adder

Load all highs into input control latch IC9. Gated octave adder IC22 should be disabled and pins 3, 4, 5, 6, should all read low. Jumper IC22-2 low and observe pulses on pins 3, 4, 5, 6 with logic probe or scope. If pulses are at IC22-1 and any output is "dead", replace IC22.

LASER & TORPEDO SOUND (block 3)

During game play, the ships attempting to "RIP OFF" fuel canisters from the center of the playfield protect themselves by firing short laser bursts at the defender ship. The defender ship in turn destroys these invaders by firing torpedo energy bursts. Both sounds are generated by identical circuitry with slight component value changes. The operation of the torpedo circuit is described:

Torpedo energy burst circuitry contains a VCO frequency control switch IC10 (7406), a VCO, bipolar-to-TTL converter and level translator Q9 (2N3904), and gated octave adder IC18 (74LS393). The three latter elements are identical in operation to those used in background sound generation (refer block 2 discussion).

The CPU enables a burst of torpedo fire by holding IC10-11 low thru 16 pin connector ribbon J4 via pin 14. A low on IC10 (7406) pin 11 opens the switch (refer Figure 1) and allows the voltage to rise on C28 (0.lmf). As this voltage increases, the VCO frequency of IC17-6 decreases. Transistor Q9 translates the large voltage swing of the VCO to +5 volt pulses which in turn clock gated octave adder IC18. Pins 3, 4, 5, 6 output squarewaves to resistor network R72-75 when chip enable pin 2 is held low. The torpedo burst waveform is AC coupled into pre-amp IC14 thru patch jumper W8 (refer to hints section) via C21 (0.68mf).

TEST PROCEDURES — torpedo sound

Observe pulses at VCO output IC17-6. Pulses should be square waves between +10 volts and -10 volts. With scope or logic probe, verify pulses from Q9 on pin 1 of IC18. Gated octave adder output pins IC18-3, 4, 5, & 6 should be low with CPU connector ribbon J4 removed. Tie IC10-11 to ground. Pulses should be now present on IC18 pins 3, 4, 5, 6.

MOTOR 1 SOUND (block 4)

As the invader vehicles enter the playfield, a motor sound is generated. The audio waveform

is the result of mixing rectangular waves of different frequency from oscillators IC11 (LM555) and IC13 (LM555). The mixed waveform is then fed to pin 2 of current controlled amplifier (CCA) IC12 (CA3080A). The CPU enables the audio by closing a voltage switch made of Q4 & Q5. This voltage then drives a current through R36 to gate on IC12. Current amplifier IC12 generates a current signal at pin 6 which is converted to a voltage at R19 (27K). The signal is then AC coupled to pre-amp IC14 via C12 (0.1mf) from buffer IC7.

VOLTAGE SWITCH

Transistors Q4, Q5 and associated resistors form the voltage switch. The switch is disabled when the base of Q4 is held high by the CPU thru input control latch IC9. Q4 is now effectively out of the circuit and -3 volts appears at its collector via voltage divider R42, R43 and the -15 volt source. Q5 is effectively out of circuit (open) and allows no current flow, disabling the CCA (IC12). When the base of Q4 is held low, it turns on (closes) and drives current into the input of IC12, enabling motor audio.

*CCA

IC12 can be imagined as an amplifier that generates a current waveform characteristic of the voltage appearing at pin 2. The strength or gain of the output current is porportional to the current injected into pin 5 via R36 (refer to Fig. 2).

TEST PROCEDURE — motor 1 sound

Multivibrators IC11 & IC13 should produce pulses on pin3. This can be verified with a logic probe or oscilloscope. If missing, verify that capacitors C14 & C17 are not shorted. Verify that coupling capacitors C16 & C19 are not open.

*CCA

Cutting jumper patch W6 should turn off IC12. Temporarily jumpering the starred end of W6 to ground should turn the CCA on. If the CCA appears dead, cut jumpers W1 & W3 to isolate IC12 from other CCA's which could be loading down IC12.

*VOLTAGE SWITCH

Load all highs into input control latch IC9. the base of Q4 should be approximately +5 volts. The collector should read -3 volts. With a jumper, ground the base of Q4. The collector should read +0.7 volts or greater. If not, replace Q4. Motor should now be audible. If no audio is heard, replace Q5.

BEEP SOUND (Block 5)

The beep audio occurs during game mode as invading ships enter into accelerated offensive levels and consequently become more difficult to destroy. The circuit has elements identical in operation and theory as the Motor 1 sound, namely, a voltage switch, CCA, and oscillator. The sound is a burst of several short tones and is controlled by the CPU thru input control latch IC9. The oscillator IC5 produces pulses on pin 3 which drive CCAIC6. The output of IC6 is gated by voltage switch Q2 & Q3 via gain resistor R18 (820K). Current controlled amplifier IC6 drives buffer IC7 via jumper patch W3.

TEST PROCEDURE

Refer to Motor 1 test procedure.

EXPLOSION SOUND (Block 7)

When a ship is destroyed, an explosion noise is enabled by the CPU thru connector J4 pin 16. The voltage switch for CCA IC3 is composed of one shot IC4 (LM555), Q1 (2N3906) and associated circuitry.

The collector of Q1 normally rests near -15 volts with Q1 off, disabling the CCA. When IC4-2 is pulsed low by the CPU it emits a momentary high to the emitter of Q1, turning it on hard. C8 changes very rapidly to +3 volts which enables the explosion audio via R10 (20K). The output of IC4 then dies, cutting off Q1. Capacitor C8 slowly discharges through R10, gradually decreasing the explosion audio. Ic4, Q1, & C8 form a fast attack, slow decay circuit in this application.

IC1 (S2688) is a wideband random noise source that ouputs a complex signal of widely varying frequency. The frequency band of interest is separated by filter IC2 and its associated RC network and drives CCA IC3.

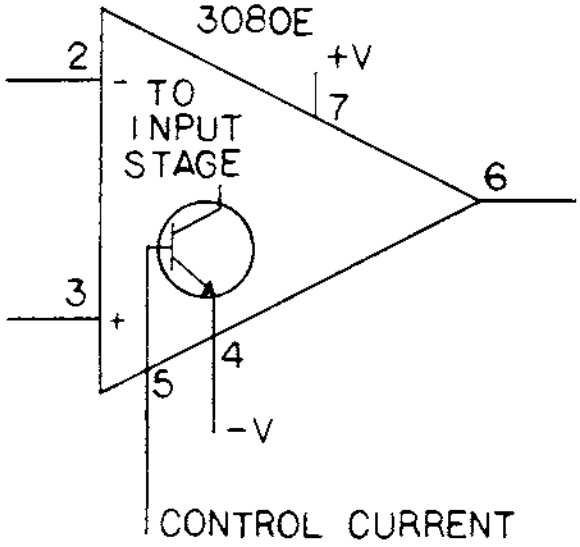

FIGURE 2

The explosion waveform enters buffer IC7 via jumper patch W1.

TEST PROCEDURE — explosion sound

Noise generator IC1 should measure 4-7 volts AC with a volt meter. The output of IC2 is a very low frequency signal measuring 10-20 volts PK-to-PK on a scope.

With 16 pin ribbon cable J4 removed, tap IC4-2 to ground while observing output pin 3. There should be a high going pulse generated. The collector of Q1 should increase from -15 volts to about +3 volts. If the explosion cuts off hard C8 is open. If the explosion sounds like single or multiple tones or a broken record, replace IC1. If the explosion sounds garbled check D12, D13.

CCA

Refer to Motor 1 test procedure.

OUTPUT AMPLIFIER (Block 1)

The audio amplifier section consists of pre-amp and volume pot driver IC14 (TL081), main driver amp IC15 (TL081) and speaker drive transistors Q6 & Q7.

IC14 drives the external volume pot located on the coin door and its associated cable. If no or very little volume is heard, meter the pot wires between JI-8 and JI-3. The resistance should vary as the pot is rotated. If the audio is at maximum volume regardless of the pot position, suspect an open circuit between ground and the pot lead connected to connector JI-1.

The final drive is a non-inverting amplifier circuit containing IC15, Q6 & Q7. Observe the waveform at the speaker wire at the emmitter junction of Q6 & Q7. If the upper half of any sound waveform appears clipped, suspect Q6. For lower half, Q7 is the suspect. For no audio meter Q6 & Q7 out of circuit and look for burned resistors R52 & R54.

APPENDIX

INPUT CONTROL CIRCUITRY

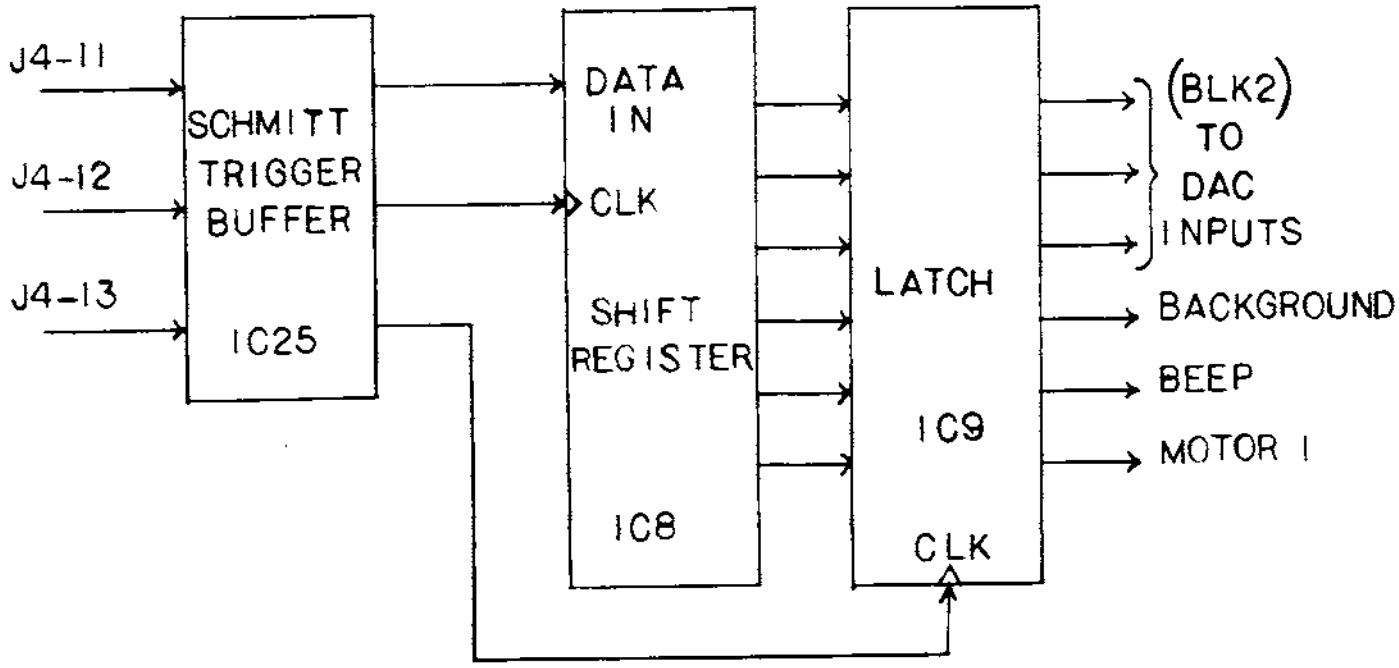

OUTPUT CIRCUITRY

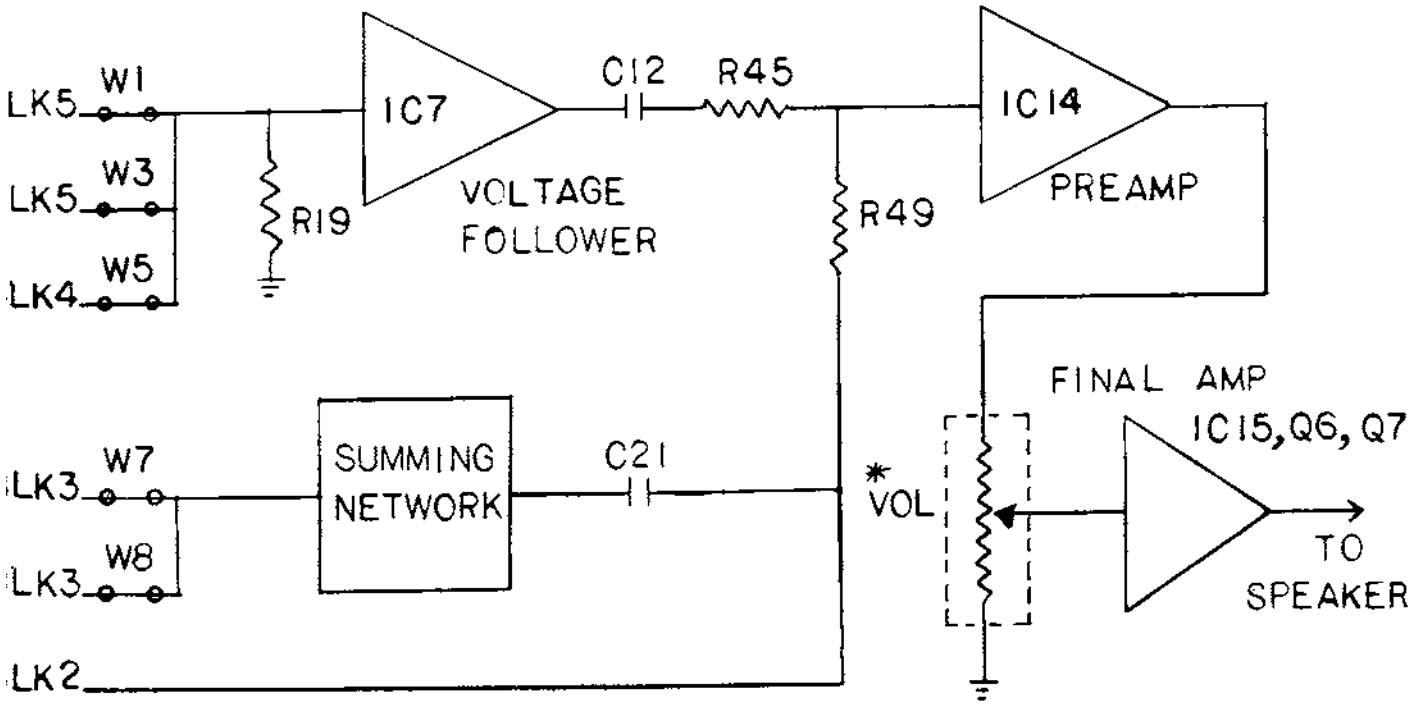

BLK1

* VOL POT IS LOCATED ON COIN DOOR

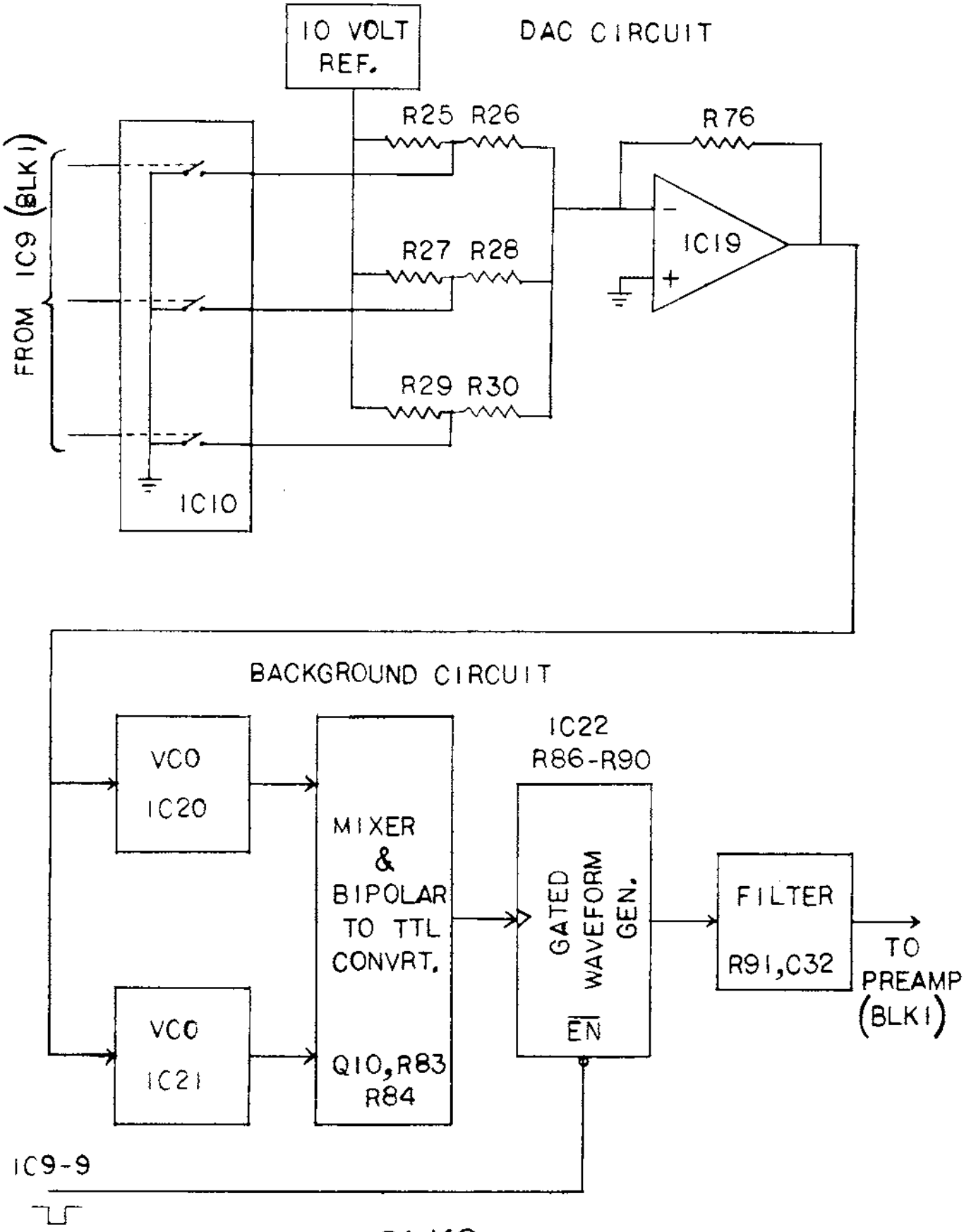
10 VOLT REF.
DAC CIRCUIT
R25 R26
R76
FROM IC9 (BLK1)
R27 R28
IC19
R29 R30
IC10
BACKGROUND CIRCUIT
IC22
R86-R90
VCO
IC20
MIXER & BIPOLAR TO TTL CONVRT.
GATED WAVEFORM GEN.
EN
FILTER
R91,C32
TO PREAMP (BLK1)
VCO
IC21
Q10,R83 R84
IC9-9

BLK2

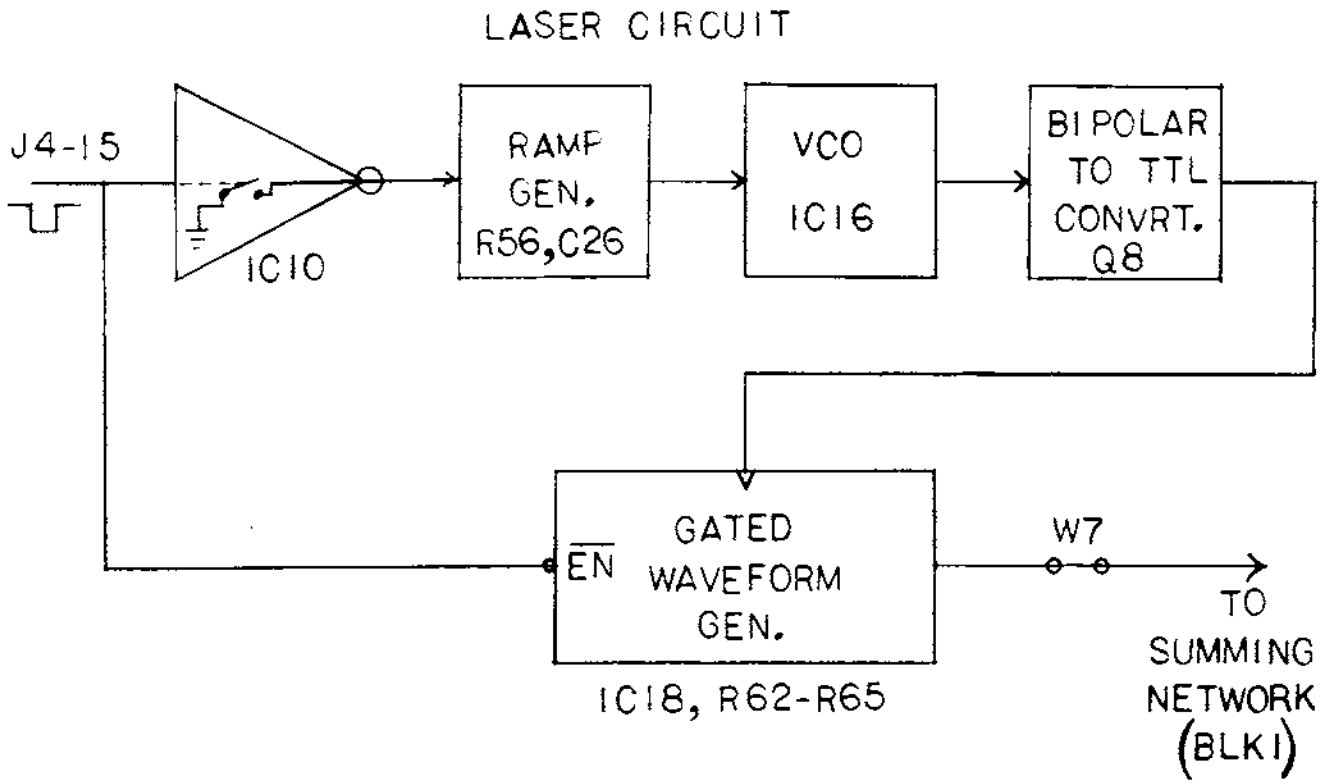
LASER CIRCUIT
J4-15
IC10
RAMP GEN. R56,C26
VCO IC16
BIPOLAR TO TTL CONVRT. Q8
EN
GATED WAVEFORM GEN.
IC18, R62-R65
W7
TO SUMMING NETWORK (BLK1)

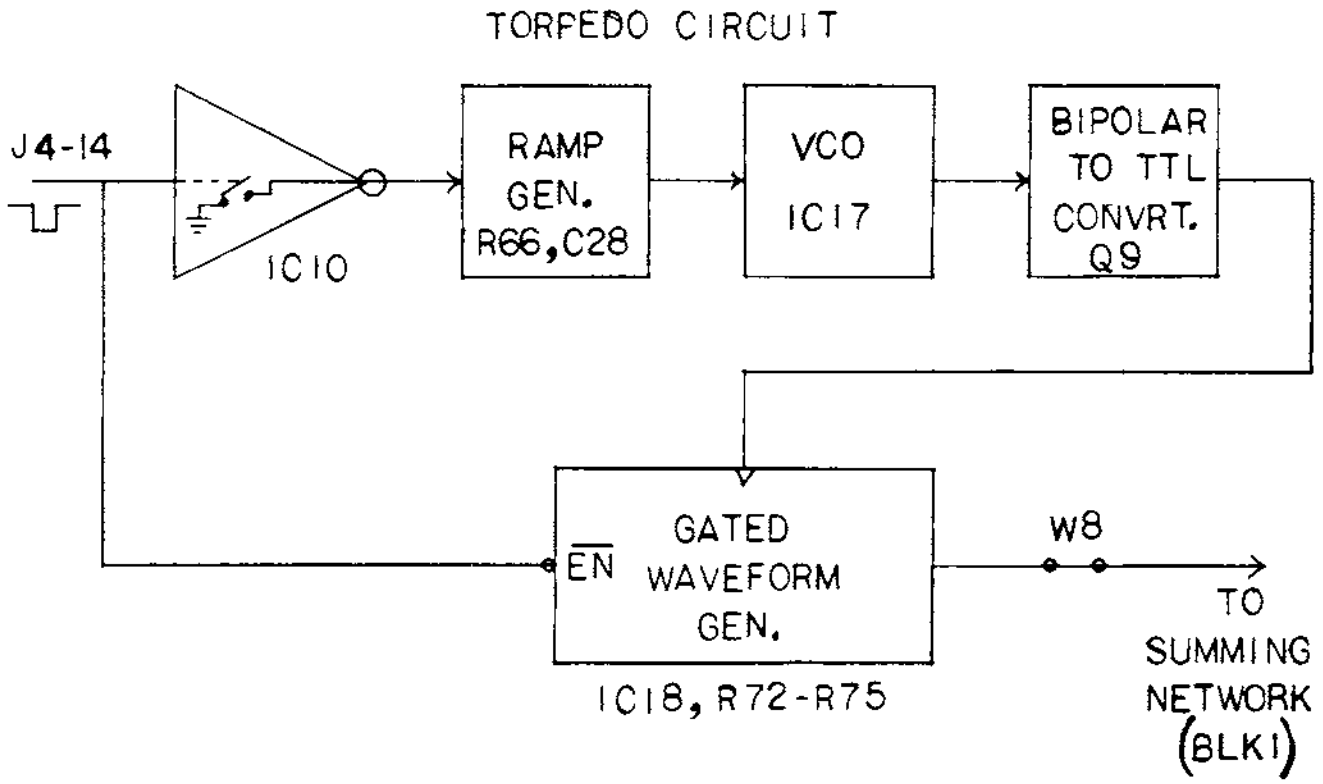
TORPEDO CIRCUIT
J4-14
IC10
RAMP GEN. R66,C28
VCO IC17
BIPOLAR TO TTL CONVRT. Q9
EN
GATED WAVEFORM GEN.
IC18, R72-R75
W8
TO SUMMING NETWORK (BLK1)

BLK3

MOTOR 1 CIRCUIT

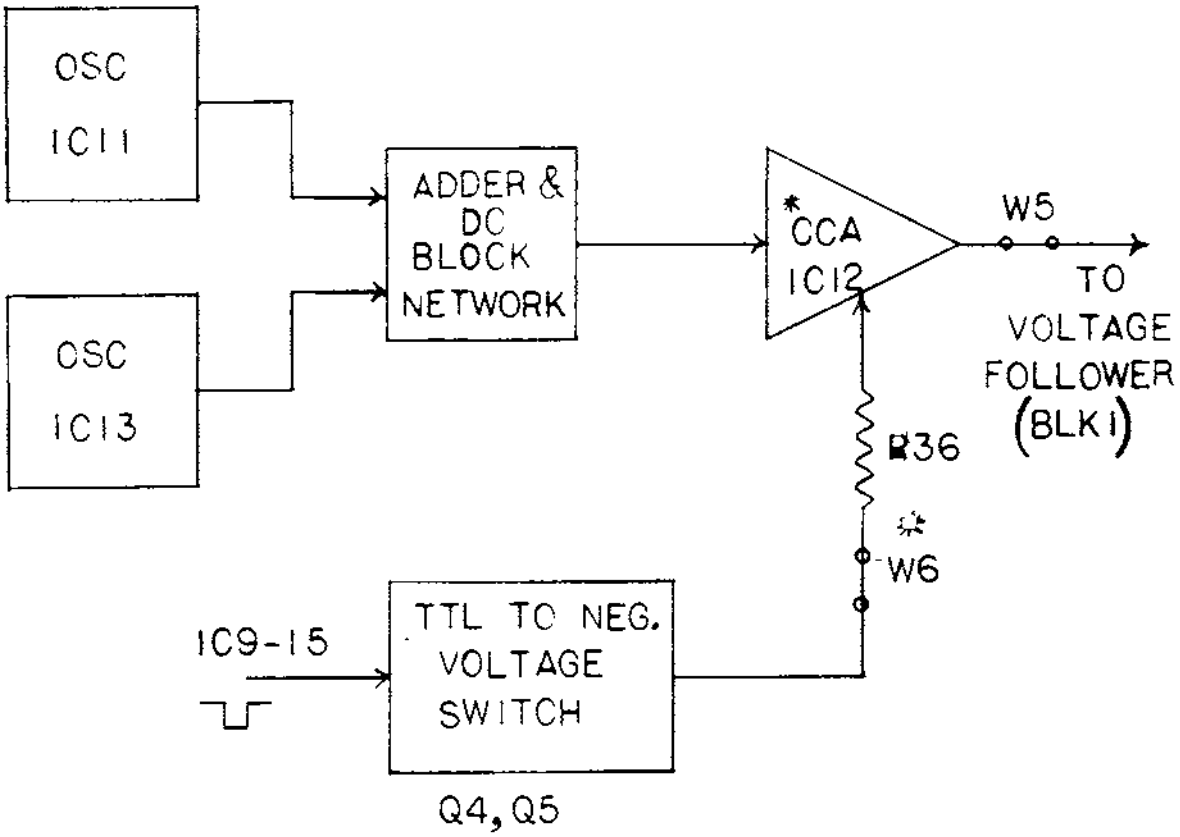

* CCA = CURRENT CONTROLLED AMPLIFIER

BLK4

EXPLOSION CIRCUIT

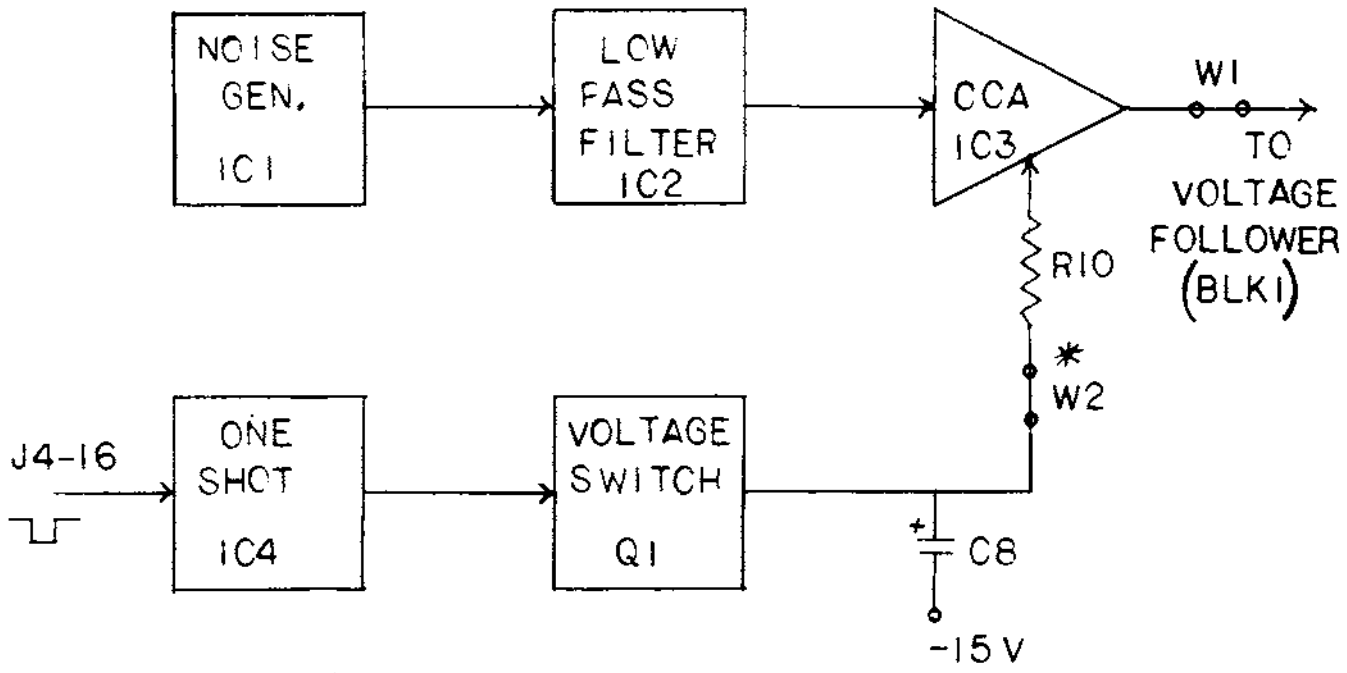

BEEP CIRCUIT

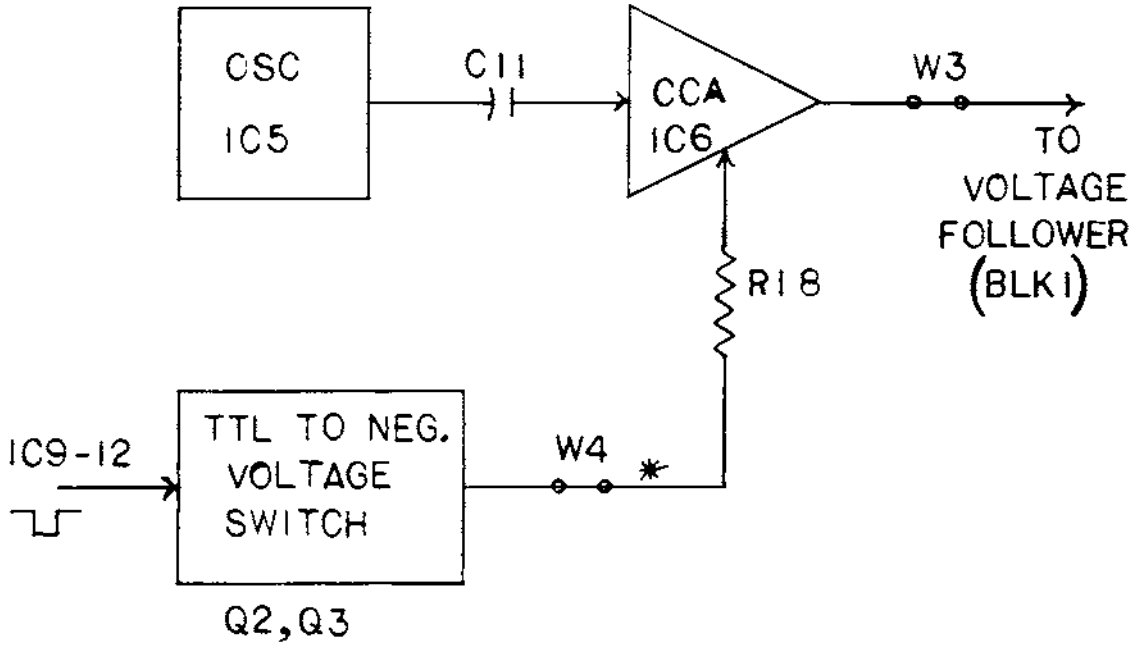

DEFINITIONS

TTL (Transistor-Transistor Logic) compatible levels are defined as follows:

1) A TTL "low" or logic 0 is any voltage less than 0.8 volts.

2) A TTL "high" or logic 1 is any voltage greater than +2.4 volts but less than +5 volts.

VCO: Voltage Controlled Oscillator

CCA: Current Controlled Amplifier

IC: Intergrated Circuit (Chip)

NOTATION

A particular pin of an IC (Intergrated Circuit) is denoted in the text by first the chip designation and then the pin number: e.g. IC25-10 means Pin 10 of IC25.

A particular pin of a connector is denoted by first the connector designation and then the pin number: e.g. J4-15 means pin 15 of connector J4.

Jumper patches W1 thru W7 are sections of a trace on the audio board designed to be severed in order to isolate a section of circuitry for test purposes. Be sure to sever between the two eyelets and repair by adding a short jumper wire. DO NOT repair any trace by adding a blob of solder at the sever. This will cause intermittent operation.

CAUTIONS

Never connect pin 5 of a CA3080 (CCA) directly to ground or any other voltage. Failure to follow this rule can cause the IC to explode (also known as the plastic pop corn effect).

Never connect a TTL output to +5 volts. The plastic pop corn effect applies here also.

TEST EQUIPMENT

For troubleshooting this board you will need:

1) an inexpensive V.O.M.
2) logic probe — not necessary, but recommended
3) several jumper wires with "E-Z" hooks
4) an oscilloscope — same as item 2

TROUBLESHOOTING

All VCO outputs will measure 13 to 15 volts AC with a VOM (volt-ohm meter).

All 555 multivibrator outputs will measure 1.5 to 3 volts AC with a VOM.

SECTION 6

MAINTENANCE

UNIVERSAL BENCH TEST

CONFIGURATION

The components depicted in figure A represent the integral elements and interconnects necessary to effectively bench test the Cinematronics vector display video game system. The configuration is universal in that the game logic board A, display assembly B, and the power supply D are consistent from game to game. Audio board C varies in design for each new game though maintaining the pinout of its input power molex plug. Player control ribbon cable 3 terminates at the player control panel elements of each game (i.e. Joystick, Fire & Thrust buttons, Coin Acceptor Mechanism, etc.)

POWER INTERCONNECTS

The power supply D provides all voltages necessary for game operation (refer to main harness assembly drawing CA202201).

Logic board drive is +5 volts ± 5% applied to pin 10 of the input power molex plug, & ground enters the logic board thru pin 4 to pins 1, 5, and 6. The logic board will free run in the game attract mode with proper power applied.

The audio board accepts +25 volts on pin4 and -25 volts applied thru pin 6 to pin 8. Ground enters pin 7 and is trace connected to speaker return pin 5. Pin 9 accepts +5 volts DC.

Power dive for the display is +25 volts thru pin 6 of its molex plug to pin 5 and -25 volts on pin 8. The CRT filament voltage of 6.3 V.A.C. enters the display electronics through pins 1 & 7 via a twisted pair of wires from the supply. A full wave rectified, unfiltered spot kill level of approximately +25 volts is applied to pin 14. The assembly is grounded thru pin 15 to pin 12.

SYSTEM TEST CONSIDERATIONS

As previously mentioned, the logic board A will free run in the particular game attract mode solely with +5 volt applied. Ribbon cables 1 & 2 are output lines and can be removed without affecting the free-run mode. Ribbon cable 3 is an input line and can also be removed for test purposes while free running.

The audio board C can be effectively diagnosed with proper power applied and a speaker. The logic board generates most sounds by grounding various control lines through ribbon cable 2. The cable can be removed and game sounds can be generated by tying these lines low temporarily with a jumper wire. Refer to the appropriate audio board schematic and theory of operation section.

The display assembly cannot be powered up without data cable 1 from the logic board connected. With the cable open or improper data being fed from the logic board, the circuit breakers CB1 & CB2 on the power supply will trip indicating a load in excess of 3a being drawn from the +25 and -25 volt lines. Testing of the monitor requires a functional logic board. While troubleshooting a no display condition, it is recommended to remove the 8 pin moulded female plug from the neck of the CRT to protect the phosphor on the tube face from being burned by a high intensity spot.

TEST EQUIPMENT

For most test purposes, a wideband oscilloscope and a digital or analog multi-meter is adequate. Also, a tri-level logic probe for verifying the presence of digital information is recommended.

Testing and troubleshooting of the logic board is the least straightforward aspect of bench test. However, Cinematronics has developed a logic board exerciser to be used in conjunction with a signature analyser that allows effective troubleshooting & repair with a minimum knowledge of microprocessor theory and operation. The exerciser puts a 4 bit alphanumeric code on each IC leg of each chip on the CPU board which then can be probed & read with the signature analyser to verify proper operation. Contact the customer service department at Cinematronics for details.

TEST PROCEDURES

The first step in effective bench testing is to review the system theory of operation included in the manual. Discussed are principles from the mathematical concept of vector systems to the actual hardware techniques employed in

generating a vector video game display.

For specific troubleshooting procedures, refer to the symptom-remedy diagnostic chart included in the manual.

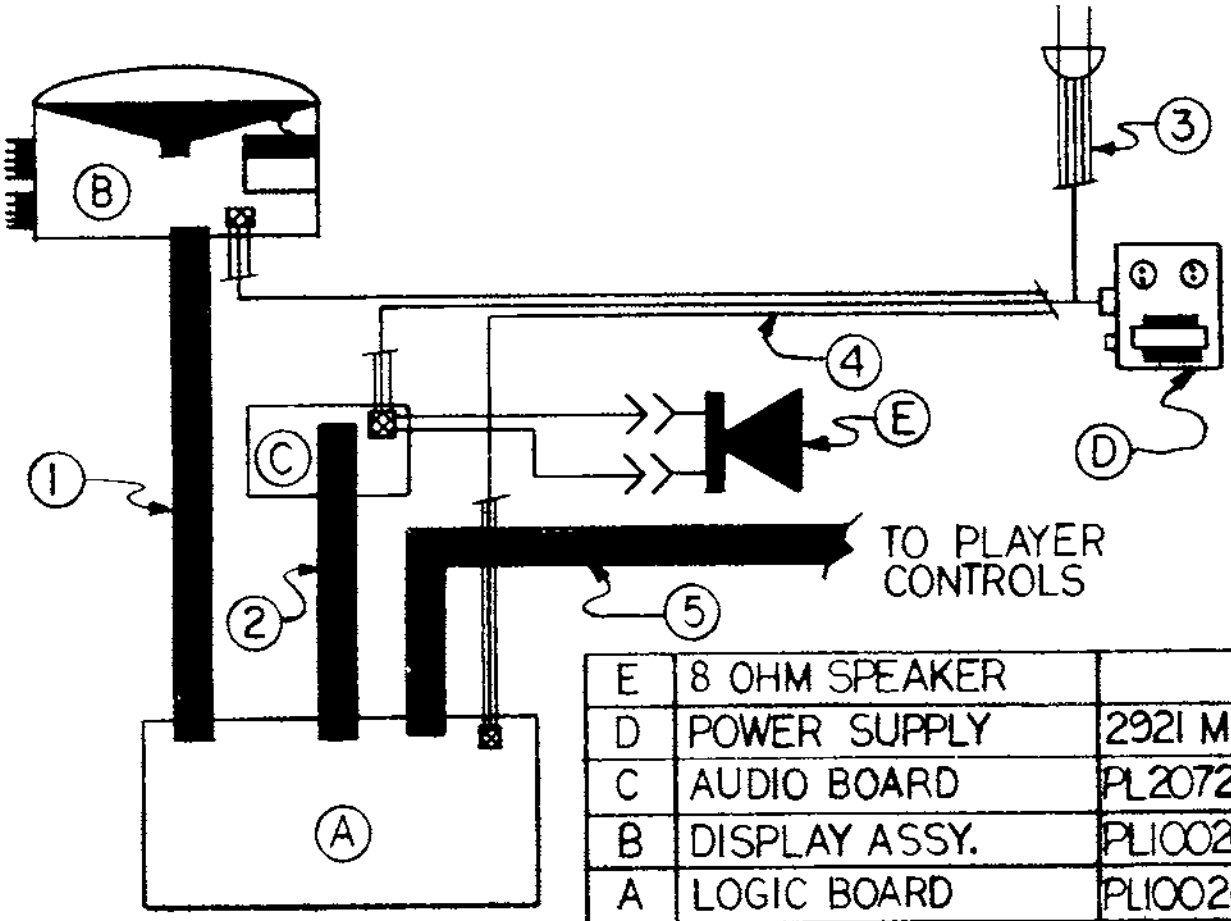

FIGURE A

ITEM	PART	NO.
E	8 OHM SPEAKER	
D	POWER SUPPLY	2921 MDL
C	AUDIO BOARD	PL207201
B	DISPLAY ASSY.	PL100204"
A	LOGIC BOARD	PL100203
5	RIBBON CABLE 26 PIN	2132A
4	MAIN HARNESS ASSY.	PL100200
3	A.C. CORD ASSY.	PL100202
2	RIBBON CABLE 16 PIN	2118
1	RIBBON CABLE 34 PIN	2119

MATERIAL:

DRAWN BY: S. HURLBERT DATE 3-80

PROJECT ENGR: DATE

RELEASE APPROV: DATE

FINISH: BREAK ALL SHARP EDGES AND DEBURR ALL HOLES.

DO NOT SCALE DWG

TOLERANCE: UNLESS OTHERWISE SPECIFIED

PROJECTION: SCALE: NONE

CINEMATRONICS INC. El Cajon Ca. 92020

DWG TITLE
UNIVERSAL BENCH TEST CONFIGURATION

MODEL NO.	DWG SIZE	DWG NO.	REV.
		MN207800	

CODE IDENT. SHEET 1 OF 1

BRUNING 40-21 40423

FIGURE A

PROPRIETARY
THIS DOCUMENT IS THE PROPERTY OF CINEMATRONICS INC AND IS NOT TO BE REPRODUCED OR DISTRIBUTED WITHOUT WRITTEN AUTHORIZATION OF CINEMATRONICS INC

REVISIONS			
REV	DESCRIPTION	DATE	APPROVED

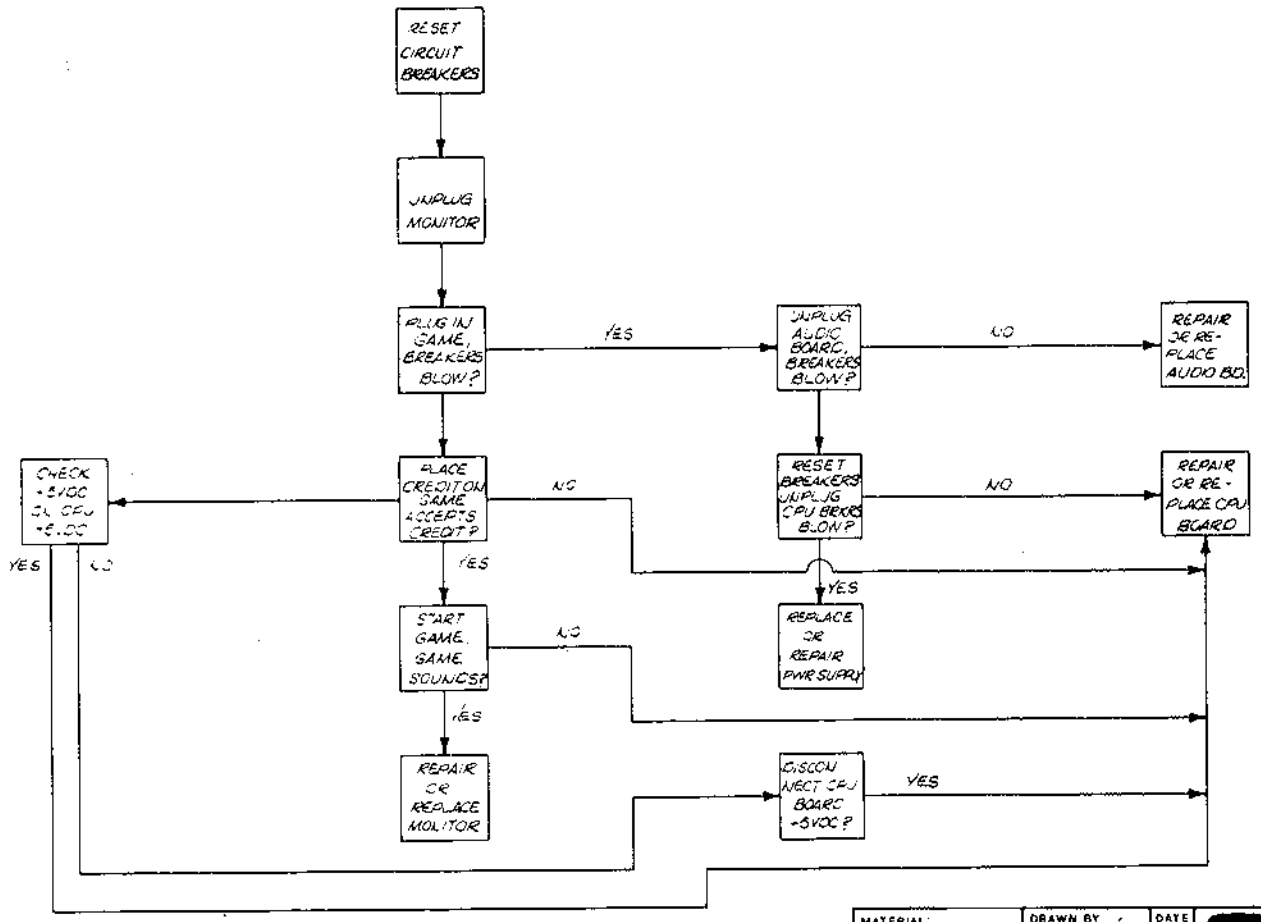

NOTES: UNLESS OTHERWISE SPECIFIED

MATERIAL	DRAWN BY	DATE	CINEMATRONICS INC, El Cajon Ca 92020
	PROJECT ENGR.	DATE	DWG TITLE: SYSTEM TROUBLESHOOTING FLOW CHART
FINISH	RELEASE APPROV.	DATE	
	DO NOT SCALE DWG		MODEL NO. / DWG SIZE C / DWG NO. MU205803 / REV A
	TOLERANCE: UNLESS OTHERWISE SPECIFIED		CODE IDENT / SHEET 1 OF 1
	PROJECTION:	SCALE: NONE	

TABLE 6-1. TROUBLESHOOTING GUIDE

PROBLEM	PROBABLE SOLUTIONS
No Picture	Listen for audible "clatter" from the deflection yoke on the CRT neck. If the clatter is present, deflection circuitry is working and the problem is in the intensity circuit. If no high voltage, see NO HIGH VOLTAGE section. If game audio is present, the CPU board is functional and the problem is in the monitor. If the audio is distorted or absent, the CPU board is suspect. If CPU board is equipped with red led near the input power plug, verify that it flashes once when power is applied and remains off thereafter. If no LED, verify that C8 pin 6 is constantly low with a voltmeter. Check the neck of the CRT for a glowing filament. If there is no glow, check the brown & black twisted pair of the CRT plug for 6.3 volts AC. Be sure all connections to the CPU board and monitor are firmly seated. Connect a scope to the yellow wire leading to the CRT connector. Set brightness full clockwise. There should be an 80-100 volt DC base with pulses dropping down to a 40 volt level. If no pulses, probe U7 pin 4 with a scope and observe data pulses. If present, check Q2 & Q3 with an ohmeter or transistor tester. Check cathode of CR5 for a full wave rectified, unfiltered voltage signal floating at +25 volts. Check seating of CRT plug. Remove and probe with scope to verify presence of proper signals.
Narrow Line on Display	Check for bad solder & crimp connections to yoke wires. Check for open yoke windings with ohmeter. Verify continuity between display board and heat sunk power transistors Q110, Q210, Q111 and Q211. Check Q110, Q210, Q111, Q211 with ohmeter or transistor tester. Inspect solder connections on circuit board molex connector socket pins.
Half Picture	Left Half: Check Q206, 208, 210 Right Half: Check Q207, 209, 211 Top Half: Check Q107, 109, 111 Bottom Half: Check Q106, 108, 110

TABLE 6-1. TROUBLESHOOTING GUIDE (Continued)

PROBLEM	PROBABLE SOLUTIONS
	Check solder connections on heat sink molex plugs J3 & J4. Check diodes CR109, 110, 111 Check diodes CR209, 210, 211 Check transistors Q105, Q205 Check resistors R116, R216.
No Brightness Control	Check intensity pot R11 for open wider or internal short. Check for open capacitor C17. Check for bad solder connections to R11.
Circuit Breakers Trip	Disconnect power to display board. If circuit breakers continue to blow, check for shorted speaker coil. Verify that the output power transistors on audio board are good with an ohmeter or a transistor tester. Observe L.E.D. on logic board near input power molex. LED should flash once when power is applied to game and remain off. For earlier versions not so equipped, probe C8 pin 6 with logic probe. Pin 6 should read low indicating CPU is not in continuous reset. Measure the voltage at T13 pins 10 & 20 with a voltmeter. The reading should be between 4.8 and 5.1 volts DC for normal system operation. Remove connectors J3 and J4 on the display board and check power transistors Q110, Q111, Q210, and Q211 located on the heatsinks with an ohmeter or transistor checker. Check diodes CR114, 115, 214, 215, CR12 and CR15. Replace connectors J3 & J4. Check the horizontal DAC and vertical DAC for proper supply voltages on pins 13, 14, and 22. With an oscilloscope, check pin 15 for a ±4 volt waveform centered about zero volts. Verify a ±2 volt peak to peak signal centered about zero volts at pin 6 of U102 and U202. Remove power and meter all deflection transistors in circuit, comparing a component located in the vertical channel with its counterpart in the horizontal channel. Replace analog switch U1.
Picture on Display Jitters	Check size pots R109 and R209 for wiper noise by turning briskly while observing the screen. Readjust for proper screen size. Check for bad solder connections on R109 & R209. Check DAC U101 & U201 for bad solder connections. Insure that all molex connectors are properly seated.

TABLE 6-1. TROUBLESHOOTING GUIDE (Continued)

PROBLEM	PROBABLE SOLUTIONS
	Check analog switch U1 for faulty operation, loose connections to socket or poor solder connections.
No High Voltage	If display board is equipped with KELTRON high voltage module, verify +25 volts input on J6 pin 4 molex. Verify +90 volts DC at J6 pin 1 and +400 volts DC at J6 pin 3. Replace high voltage module. On display board, read +18 volts DC at regulator U3. If missing, verify +25 volts present at input pin of U3. Read -18 volts at regulator U5. If missing, verify -25 volts at input of U5. Lift winding from pin 3 of high voltage transformer T1. Measure +18 volts at regulator U3. If now present, check for shorted Q4, shorted capacitors C18, C19, C20 and bad diodes CR7, CR8. Check for 4.2KV AC at output wire of XFMR T1. Replace XFMR T1.
Dotted Display	Verify proper operation of U1. Check for proper +25 and -25 volts DC. Check operation of DAC's U101 & U201. On logic board, check I 8 pin 2 for pulses. Verify presence at analog switch.
No Audio	Check for open speaker coil. Check transistors 2N6292 and 2N6107 and nearby output components on audio board with ohmeter or transistor checker. Check for open wiper on volume control mounted on inside of coin door. Refer to audio board theory of operation and troubleshooting guide. Replace F2 on logic board.
Coin Counter is Inoperative	Check 2N6292 transistor on logic board with ohmeter or transistor tester. Verify proper operation of A4 by grounding A4 pin 1. Coin counter should click. Disconnect coin counter molex connector. Measure DC voltage on red wire. Meter should read +25 volts DC.

TABLE 6-1. TROUBLESHOOTING GUIDE (Continued)

PROBLEM	PROBABLE SOLUTIONS
Gives No Credits	Tie E4 pin 12 to ground. If credits fail to appear, replace E4. If credits appear, disconnect logic board ribbon connector J3. Measure +5 volts on A4 pins 1 & 5. If missing, replace pull up resistor pack C2. Alternately ground A4 pins 1 & 5. If credits appear, problem is in switches on coin door. Verify proper coin door microswitch operation. Reconnect J3. Observe A4 pins 3 & 6 alternately while depressing microswitch lever on coin mechanism. Pins 3 & 6 should change states. Replace A4. Replace F2 (74LS259) on logic board.
Player Control Button(s) Inoperative	Refer to player control schematic in APPENDIX. Verify with ohmeter proper closure of player control leaf blade switches. Remove J3 connector. Measure +5 volts on D4 - 1, 2, 3, 4, 12, 13, 14, 15. If missing, replace D4. Replace pull up resistor pack D2. Measure +5 volts on C4 - 1, 2, 3, 4, 12, 13, 14, 15. If missing, replace C4. Replace pull up resistor pack C2. Coin up a game and, with J3 disconnected, ground aforementioned pins on C4 & D4. If display responds problem is in continuity from J3 to player control switches.

SECTION 7

PARTS LIST

ITEM	PART NUMBER	DESCRIPTION	MFGR. PART NO.	QTY
1	AM100600	Cabinet Assembly		1
2	AD207400	Control Panel Assembly		1
3	AD100404	Circuit Panel Assembly		1
4	AD100406	Monitor Assembly		1
5		Power Supply	Xentek #2921	1
6	2119	Ribbon Cable Logic to Display		1
7		Operators Manual		
		CABINET ASSEMBLY		
		PL100600		
1		Cabinet		1
2	2180	Coin Box Cover		1
3	2181	Coin Box		1
4	AM100601	Coin Door Assembly		1
5	AD100405	Coin Meter Assembly		1
6	MP203610	Cover Plate, Front Face		1
7	2128-A	Shield, Display		1
8		Grill, Speaker	Speco #5713	1
9		Speaker		1
10		Grommet, Rubber Lt. Fix.	Smith #2188	1
11		Fixture, Florescent Lamp		1
12		Florescent Lamp		1
13	MP205642	Bezel, CRT		1
14	MP207002	Plexiglass Screen CRT		1
15	AW207000	Decal, Side		2
16		Lock, Rear Door	K15760	1
17	CA100200	Main Wire Harness Assy.		1
18	CA100202	A C Cord Assembly		1
19		Flat Braid ⅜"		13 ft.
20	CA100202	Vol. Control Harn. Assy.		1
21		Terminal Strip	Cinch #601	1
22		Cover, Terminal Strip	Cinch#MS-601-3	1
23	2133	Label, Patent Notice		1
24	2138	Label, Safety GND Notice		1
25	2139	Label, Unit Wired For		1
26		Cap Film .01mf 600V	TS5-103	2
27		Wire Nuts	Ideal #73 B	2
28		Terminal, Ring Tongue		5
29		Carriage Bolt 3/16"-1¼"		8
30		Carriage Bolt 3/16"-1½"		8
31		Carriage Bolt 3/16"-2"		6
32		Hex Nut 10-24		22
33		Wing Nut 3/16" 10-24		2
34		Wood Screw #8-⅝" Blk.		28
35		Washer, #10 Small Pattern		12
36		Washer, #10 Large Pattern		8

ITEM	PART NUMBER	DESCRIPTION	MFGR. PART NO.	QTY
37		Washer, #10 Int. Th. Lock		4
38		Washer, #10 Ext. Th. Lock		9
		VOLUME CONTROL HARN. ASSY.		
		PL100205		
1		Pot. 10K	JAIN056103	1
2		Molex Plug 3 Cir.	03-09-2038	1
3		Molex Female Socket	02-09-1118	2
4		Molex Male Pin	02-09-2118	1
5		Ty Raps	T-18R	3
6	CA100205	Wire		Ref
		CONTROL PANEL ASSEMBLY		
		PL207400		
1	MP207600	Control Panel, Wood		
2		Switch W/Mounting Brkt.	WICO#15-0499-01	1
3		Button Assembly Long	WICO#15-0405-01	10
4		Pal Nut	WICO#19-0254-01	10
5	MP207001	Plexiglass Instr. Panel		10
6	MP205645 or	Retainer, Player Cont.	MP203606	1
7	AW207200	P.C.B. Distribution		1
8		Connector, Insul. Displ.	IDT-26-1-T	1
9	2132 A	Ribbon Cable 26 Pin		1
10		Molex Wafer Fric. Lock	09-65-1031	1
11		Swage Spacer ¼"		1
12		Wood Screw #8⅝" Blk.		2
13	CA207200	Switch Wire Harness Assy.		5
14		Leaf Switch-Replacement	WICO#15-0677-01	1
		SWITCH WIRE HARNESS ASSY.		
		PL207200		
1	WL207200	Wire List		Ref
2		Ty Raps	T 18 R	5
3		Term. Female QK Disc.		20
		CIRCUIT PANEL ASSEMBLY		
		PL100404		
1	2117 B	Mounting Plate		1

ITEM	PART NUMBER	DESCRIPTION	MFGR. PART NO.	QTY
2	AE100203	CPU P.C.B. Assembly		1
3	AE207201	Audio P.C.B. Assembly		1
4	2118	Ribbon Cable, Audio to CPU		1
5	3066	Lock Washer #6 Int. Th.		9
6	3063	6-32-½" Mach. Screw Rd.		9
7	MP203611	Bracket, Prom P.C.B. Assy.		1
8	38-105-22-01	Prom P.C.B. Assembly		1
9		4-40-½" Mach. Screw Pan		2
10		4-40 Hex Nut		2
		MONITOR ASSEMBLY KELTRON		
		PL100403		
1		CRT 19"	19VARP4	1
2	SA100401	Deflection Yoke Amplif.		1
3	SA100408	Display Sub-Assembly		1
4	37-LF13331	Analog Switch		1
5	SA100410	Yoke Assembly		1
6		High Voltage Module		1
7		Spring	171 C	1
8	2169	Mounting Bracket LH		1
9	2170	Mounting Bracket RH		1
10	2136	Label, High Voltage		1
11	2137	Label, Factory Adjust Only		1
12		4-40-½" M.S. Pan Hd. Ph.		3
13	3063	6-32-½" M.S. Rd. Hd. Ph.		3
14	3066	#6 Lock Washer Int. Th.		3
15	3065	6-32 Hex Nut		3
16	3064	#6-½" S.M.S. Hex Hd.		11
		DEFLECTION YOKE AMPLIFIER		
		PL100401		
1		Heat Sink	2107-A	2
2		Transistor	2N5876	2
3		Transistor	2N5878	2
4		Heat Sink Harness Long		1
5	2178	Heat Sink Harness Short		1
6	2134	Label, Warning		1
7		Washer, Greaseless		4
8	3063	6-32-½" Rd. Hd. Ph. M.S.		8
		YOKE ASSEMBLY		
		PL100410		
1		Yoke, Broy	746	1

ITEM	PART NUMBER	DESCRIPTION	MFGR. PART NO.	QTY
2		Molex, Female Pins	02-09-1118	3
3		Molex, Male Pins	02-09-2118	1
4		Molex, Connector	03-09-1063	1
		DISPLAY SUB-ASSEMBLY KELTRON		
		PL100409		
1	AE	Display P.C.B. Assembly		1
2	2084 D	Chassis		1
3		CRT Socket		1
4	13-1103	10K Pot. Allen Bradley	JAIN056103UA	1
5		Heat Sink — Thermalloy	22030 B	6
6		Heat Sink — Thermalloy	6045-B4	4
7		Heat Sink — Thermalloy	6070-B	2
8		Neon Bulb	NE-2	2
9		Capacitor .05mf 1600VDC	16PS-S50	2
10		Wire, 18 Gage 9"		2
11		Heat Shrink Tubing 3/16"		2
12		Heat Shrink Tubing 3/16"		2
13		Terminal, Ring Tongue		1
14	3064	#6-½" S.M.S. Hex Hd.		1
15	3083	8-32-½" Rd. Hd. Ph. M.S.		2
16	3085	#8 Lock Washer Split Rg		2
17	3084	8-32 Hex Nut		2
18	SA300401	Wire Harness H.V. Interconnect		1
19	WL100208	Wire, Pcs. 1-6		Ref
		DISPLAY P.C.B. ASSY. KELTRON		
		PL100204		
1	10-5150	Resistor, 15 ohm ¼W 5%C		2
2	10-5330	Resistor, 33 ohm ¼W 5%C		2
3	10-5470	Resistor, 47 ohm ¼W 5%C		6
4	10-5101	Resistor, 100 ohm ¼W 5%C		4
5	10-5201	Resistor, 200 ohm ¼W 5%C		2
6	10-5331	Resistor 330 ohm ¼W 5%C		1
7	10-5471	Resistor, 470 ohm ¼W 5%C		5
8	10-5821	Resistor, 820 ohm ¼W 5%C		2
9	10-5102	Resistor, 1K ohm ¼W 5%C		2
10	10-5182	Resistor, 1.8K ohm ¼W 5%C		1
11	10-5222	Resistor, 2.2K ohm ¼W 5%C		2
12	10-5302	Resistor, 3K ohm ¼W 5%C		3
13	10-5562	Resistor, 5.6K ohm ¼W 5%C		2
14	10-5103	Resistor, 10K ohm ¼W 5%C		5

ITEM	PART NUMBER	DESCRIPTION	MFGR. PART NO.	QTY
15	10-5683	Resistor, 68K ohm ¼W 5%C		1
16		Resistor, 47 ohm ½W 5%C		
	11-5470			4
17	11-5222	Resistor, 2.2K ohm ½W 5%C		1
18		Resistor, 8.2K ohm ½W 5%C		
	11-5822			4
19	11-5103	Resistor, 10K ohm ½W 5%C		1
20		Resistor, 2.7 ohm 1W 5%C		
	12-502.7			12
21	12-5361	Resistor, 360 ohm 1W 5%C		2
22	12-5103	Resistor, 10K ohm 1W 5%C		2
23	13-5101	Resistor, 100 ohm 2W 5%C		1
24		Resistor, .18 ohm 3W 5%C		
	14-50.18			4
25	10-4142	Resistor, 1.43K ohm ¼W 1%		1
26	10-4212	Resistor, 2.1K ohm ¼W 1%MF		1
27	10-4103	Resistor, 10K ohm ¼W 1%MF		2
28	12-1101	Trimpot, 100 ohm		2
29	12-1502	Trimpot, 5K ohm		2
30	101-104	Diode		
	31-1N914B		1N914 B	11
31		Diode		
	31-1N4003		1N4003	31
32	37-7406	I.C. Hex Inverter O.C.	7406	1
33	37-7805	I.C. Regulator +5V	7805	1
34	37-7815	I.C. Regulator +15V	7815	1
35	37-7915	I.C. Regulator -15V	7915	1
36	37-TL081P	I.C. Op. Amp.	TL081 P	2
37		I.C. Digital Analog Con.		2
38		Transistor		
	33-2N2102		2N2102	4
39	33-2N3904	Transistor	2N3904	3
40	33-2N3906	Transistor	2N3906	2
41		Transistor		
	33-2N5210		2N5210	7
42	33-2N5320	Transistor	2N5320	2
43		Transistor	2N5320	2
	33-2N5322		2N5322	4
44	33-2N5550	Transistor	2N5550	2
45		Cap Disk .005mf 50V		2
46		Cap Disk .1mf 50V		
47		Cap Disk .1mf 100V		2
48		Cap Film .33mf 35V		1
49		Cap Polycarb .022mf 200V		2
50		Cap Dip Tant .47mf 35V		1
51		Cap Dip Tant 1mf 35V		2
52		Cap dip Tant 2.2mf 35V		
53		Cap Dip Tant 4.7mf 35V		1
54		Cap elect 47mf 50V		2

ITEM	PART NUMBER	DESCRIPTION	MFGR. PART NO.	QTY
55		Socket 16 Pin		1
56		Molex, Male Pin Sold Tail	ICL-163-S6-T	8
57		Molex, Receptacle 15 Cir.	02-09-2134	1
58		Molex, Wafercon 6 Cir.	03-09-1152	1
59		Molex, Wafercon 6 Cir.	09-18-5061	1
60		Molex, Wafercon 6 Cir.	09-18-5062	2
61		Connector, P.C.B. 34 pin	09-18-5069	1
62	2071 E	Printed Circuit Board		1
		CPU P.C.B. ASSEMBLY		
		PL100203		
1	37-25LS181	I.C. ALU	25LS181	3
2	37-74LS00	I.C. Nand Gate	74LS00	4
3	37-74LS02	I.C. Nor Gate	74LS02	4
4	37-74LS04	I.C. Hex Inverter	74LS04	3
5	37-74LS08	I.C. Nand Gate	74LS08	2
6	37-74LS10	I.C. Nand Gate	74LS10	3
7	37-74LS27	I.C. Nor Gate	74LS27	3
8	37-74LS32	I.C. Or Gate	74LS32	4
9	37-74LS75	I.C. Quad D Latch	74LS75	2
10	37-74LS85	I.C. Mag Comparator	74LS85	3
11	37-74LS86	I.C. Exclusive Or	74LS86	1
12	37-74LS107	I.C. Dual J-K Flip Flop	74LS107	7
13	37-74LS151	I.C. 1 of 8 Data Selectors	74LS151	4
14	37-74LS157	I.C. Quad Data Selector	74LS157	8
15	37-74LS163	I.C. Binary Counter	74LS163	9
16	37-74LS164	I.C. 8 Bit Shift Regist	74LS164	1
17	37-74LS194	I.C. 4 Bit Shift Regist.	74LS194	9
18	37-74LS257	I.C. Tri-State Quad	74LS257	3
19	37-74LS259	I.C. 8 Bit Latch	74LS259	1
20	37-74LS298	I.C. Quad 2-Input Multi.	74LS298	2
21	37-74LS377	I.C. Octal D Flip Flop	74LS377	6
22	37-74LS393	I.C. Dual 4 Bit Counter	74LS393	2
23	37-74S00	I.C. Nand Gate	74S00	2
24	37-74S02	I.C. Nor Gate	74S02	1
25	37-74S04	I.C. Hex Inverter	74S04	2
26	37-74S08	I.C. And Gate	74S08	1
27	37-74S32	I.C. Or Gate	74S32	2
28	37-74S113	I.C. Dual J-K Flip Flop	74S113	2
29	37-74S158	I.C. Quad 2 to 1 Data Sel.	74S158	1
30	37-74S182	I.C. Look Ahead Carry	74S182	1
31	37-7425	I.C. Dual 4 In Nor Gate	7425	1
32	37-74265	I.C. Quad Comp. Output	74265	1
33	37-74S10	I.C. Triple 3 In Nand	74S10	1
34	37-2101A2	I.C. Ram 256X4	2101A2	3
35	2085	I.C. Prom Drom 1		1
36	2086	I.C. Prom Drom 2		1

ITEM	PART NUMBER	DESCRIPTION	MFGR. PART NO.	QTY
37	2087	I.C. Prom Drom 3		1
38	2088	I.C. Prom Drom 4		1
39	2089	I.C. Prom Drom 5		1
40	2090	I.C. Prom Drom 6		1
41	37-2716	I.C. Eprom	2716	4
42		I.C.		
43	JS8722-07	7 Pole Dip Switch		1
44		Crystal 20 MHz		1
45	31-1N914B	Diode	1N914 B	2
46	33-2N3904	Transistor	2N3904	2
47	33-2N6292	Transistor	2N6292	1
48		Cap Disk .02mf 50V		58
49		Cap Disk 680pf 100V		1
50		Cap Tant Dip .33mf 35V		1
51		Cap Tant Dip 3.3mf 35V		1
52	10-5331	Resistor, 330 ohm ¼W 5%C		2
53	10-5471	Resistor, 470 ohm ¼W 5%C		1
54		Resistor, 1K ohm ¼W 5%C		
	10-5102			12
55	10-5222	Resistor, 2.2K ohm ¼W 5%C		1
56	10-5103	Resistor, 10K ohm ¼W 5%C		2
57	10-5303	Resistor, 30K ohm ¼W 5%C		1
58	10-5564	Resistor, 560K ohm ¼W 5%C		1
59	19-002	Resistor, Dip Pak 1K		2
60	K27C	Test Points		6
61		Molex, Wafercon 12 Cir.	09-18-5127	1
62	609-1622M	Connector, P.C.B., 16 Pin	Ansley	1
63	609-2622M	Connector, P.C.B. 26 Pin	Ansley	1
64	609-3422M	Connector, P.C.B. 34 Pin	Ansley	1
65		Jumpers		2
66	ICL-143-S6-T	Socket, Dip 14 Pin	Robinson/ Nugent	1
67	ICL-163-S6-T	Socket, Dip 16 Pin	Robinson/ Nugent	2
68	P7, R7, T7, U7	Socket, Dip 24 Pin	ICL-246-S7-T	7
69	2076 H	Printed Circuit Board		1
70	10-5101	Resistor, 100 ohm ¼W 5%C		1
71		L.E.D.	TIL-220	1
		AUDIO P.C.B. ASSEMBLY		
		PL207201		
1		Cap Disk 470pf 50V		3
2		Cap Disk .005mf 50V		1
3		Cap Disk .01mf 50V		4
4		Cap Disk .1mf 50V		9
5		Cap 4.7mf 35V Elect. or Tant.		1

ITEM	PART NUMBER	DESCRIPTION	MFGR. PART NO.	QTY
6		Cap Elect 25mf 50V	Sub. 22mf	5
7		Cap Elect 100mf 50V		1
8		Cap Film .01mf 35V		1
9		Cap Film .022mf 35V	Sub. .02mf	1
10		Cap Film .047mf 35V		2
11		Cap Film .1mf 35V		7
12		Cap Film .22mf 35V		2
13		Cap Film .68mf 35V Film or Tant		3
14		Resistor, 150 ohm ¼W 5%C		3
15		Resistor, 160 ohm ¼W 5%C		1
16		Resistor, 300 ohm ¼W 5%C		2
17		Resistor, 330 ohm ¼W 5%C		3
18		Resistor, 470 ohm ¼W 5%C		3
19		Resistor, 1K ohm ¼W 5%C		8
20		Resistor, 1.5K ohm ¼W 5%C		1
21		Resistor, 2K ohm ¼W 5%C		2
22		Resistor, 2.7K ohm ¼W 5%C		10
23		Resistor, 3.3K ohm ¼W 5%C		1
24		Resistor, 3.9K ohm ¼W 5%C		1
25		Resistor, 4.7K ohm ¼W 5%C		4
26		Resistor, 8.2K ohm ¼W 5%C		1
27		Resistor, 10K ohm ¼W 5%C		9
28		Resistor, 12K ohm ¼W 5%C		1
29		Resistor, 15K ohm ¼W 5%C		3
30		Resistor, 20K ohm ¼W 5%C		9
31		Resistor, 22K ohm ¼W 5%C		1
32		Resistor, 24K ohm ¼W 5%C		1
33		Resistor, 27K ohm ¼W 5%C		2
34		Resistor, 30K ohm ¼W 5%C		1
35		Resistor, 39K ohm ¼W 5%C		6
36		Resistor, 43K ohm ¼W 5%C		1
37		Resistor, 47K ohm ¼W 5%C		2
38		Resistor, 56K ohm ¼W 5%C		1
39		Resistor, 68K ohm ¼W 5%C		1
40		Resistor, 82K ohm ¼W 5%C		3
41		Resistor, 330K ohm ¼W 5%C		1
42		Resistor, 470K ohm ¼W 5%C		1
43		Resistor, 820K ohm ¼W 5%C		1
44		Resistor, 1M ohm ¼W 5%C		5
45		Resistor, 1.5M ohm ¼W 5%C		1
46	37-7406	I.C. Inverter	7406	1
47	37-7414	I.C. Trigger	7414	1
48	Sub. 74164	I.C. Shift Register	74LS164	1
49	Sub. 74377	I.C. Octal Latch	74LS377	1
50	Sub. 74393	I.C. Counter	74LS393	2
51	37-7815C	7815 C		
51	37-7815C	I.C. Regulator +15V	7815C	1
52	37-7915C	I.C. Regulator -15V	7915 C	1

ITEM	PART NUMBER	DESCRIPTION	MFGR. PART NO.	QTY
53	37-CA3080E	I.C. Transconduct Op Amp	CA3080 E	3
54	37-LM555	I.C. Timer	LM555	4
55	Sub. MM5837N	I.C. Noise Generator	AMI S2688	1
56	Sub. 848 LF	I.C. Op Amp	TL081 P	9
57	31-1N914B	Diode	1N914 B	10
58	31-1N5240	Diode, Zener	1N5240	1
59	33-2N3904	Transistor	2N3904	3
60	33-2N3906	Transistor	2N3906	5
61	33-2N6107	Transistor	2N6107	1
62	33-2N6292	Transistor	2N6292	1
63		Heat Sink Thermalloy	6071 B	4
64		Heat Sink Thermalloy	6072 B	2
65		Header, P.C.B. 16 Pin	609-1622M	1
66		Molex Wafercon 9 Cir.	09-18-5094	1
67		Molex Wafercon 6 Cir.	09-18-5069	1
68		4-40-½" M.S. Pan Hd. Ph		6
69		Lock Washer #4 Int Th		6
70		Hex Nut 4-40		6
71	AW207600	Printed Circuit Board		1
		COIN DOOR ASSEMBLY		
		PL100601		
1	2165	Coin Door		1
2		Coin Mechanism		2
3	N5078	Lock		1
4		Carriage Bolt Blk Ox 3/16"-½"		12
5		Lock Washer #10 Int Th		12
6		Hex Nuts #10-24		12
7		Cable Clamps ½"		3
		COIN METER ASSEMBLY		
		PL100405		
1		Coin Meter	E2B65D	1
2		Diode	1N4003	1
3		Molex, Female Pin	02-09-118	2
4		Molex, Plug 3 Cir.	03-09-2038	1
		A C CORD ASSEMBLY		
		PL100202		
1		Power Cord		1
2		Terminal, Spade #16	C10-401-P	3

ITEM	PART NUMBER	DESCRIPTION	MFGR. PART NO.	QTY.
		COIN SWITCH HARNESS ASSEMBLY		
		PL100203		
1		Molex, Connector W/Lock	09-50-3031	1
2		Molex, Female Crimp Terminal	08-50-0126	3
3		Terminal, Female Quick Disconnect .187-.032		6
4	WL100203	Wire 5 Pcs.		
5		Tie Wraps	T-18R	7
		POWER SUPPLY BLEED RESISTOR		
		PL100407		
1		Power Supply	Mdl 2921	1
2	16-5501	Resistor, 500 ohm 5W		2

APPENDIX A

Assembly Drawings,
Schematics & Wiring Diagrams

PROPRIETARY
THIS DOCUMENT IS THE PROPERTY OF CINEMATRONICS INC. AND IS NOT TO BE REPRODUCED OR DISTRIBUTED WITHOUT WRITTEN AUTHORIZATION OF CINEMATRONICS INC.

REVISIONS			
REV	DESCRIPTION	DATE	APPROVED

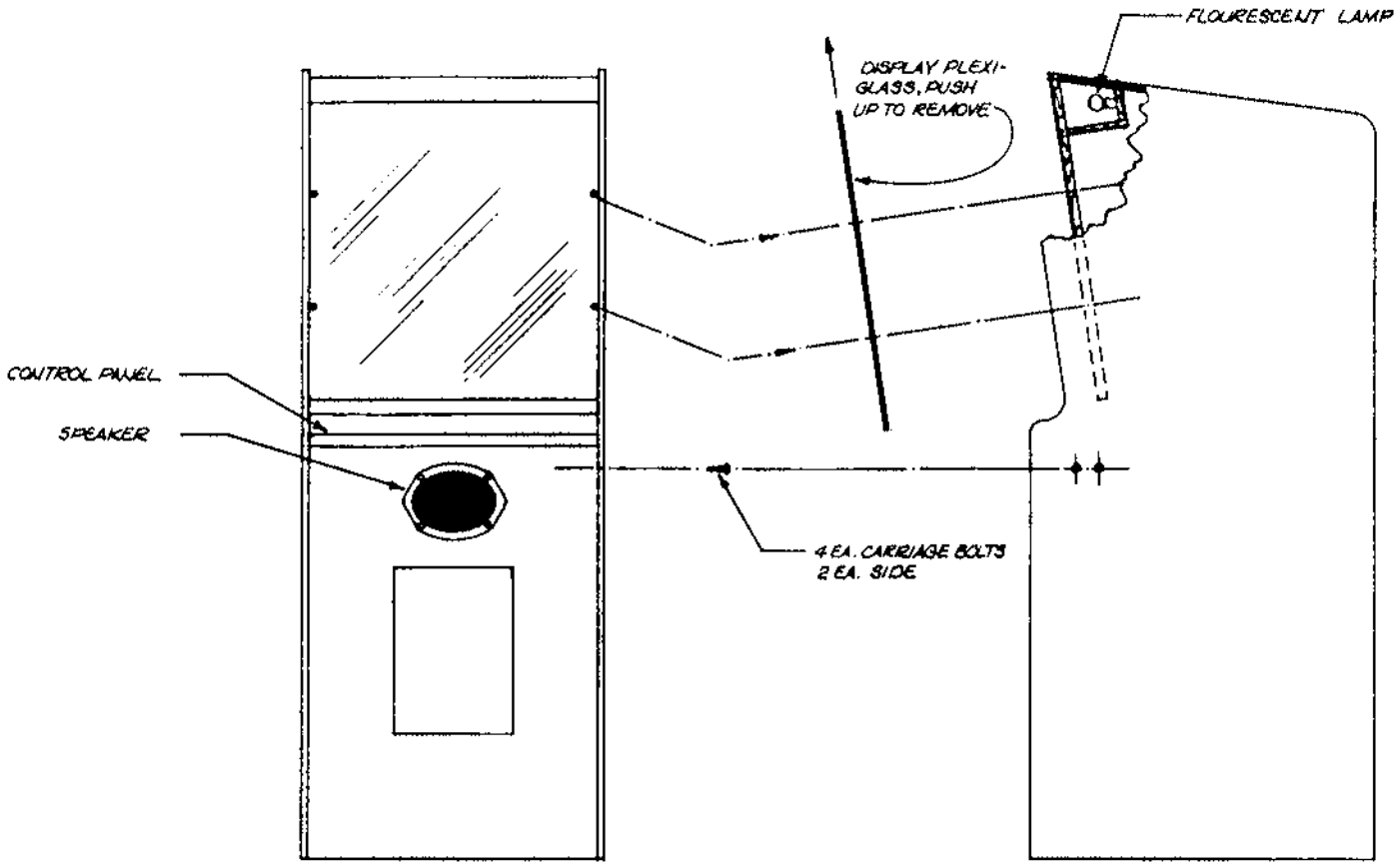

NOTES: UNLESS OTHERWISE SPECIFIED

MATERIAL:	DRAWN BY: [signature]	DATE [illegible]	CINEMATRONICS INC. El Cajon Ca. 92020
	PROJECT ENGR: C. Williams	DATE 9-79	DWG TITLE FRONT CABINET ASSY. ILLUSTRATION
FINISH: BREAK ALL SHARP EDGES AND DEBURR ALL HOLES.	RELEASE APPROV: CEW	DATE 9-79	
	DO NOT SCALE DWG		
	TOLERANCE: UNLESS OTHERWISE SPECIFIED		MODEL NO. / DWG SIZE / DWG NO. MN203801 / REV R
	PROJECTION:	SCALE:	CODE IDENT. / SHEET 1 OF 1

4 3 2 1

PROPRIETARY
THIS DOCUMENT IS THE PROPERTY OF CINEMATRONICS INC. AND IS NOT TO BE REPRODUCED OR DISTRIBUTED WITHOUT WRITTEN AUTHORIZATION OF CINEMATRONICS INC.

REVISIONS			
REV	DESCRIPTION	DATE	APPROV

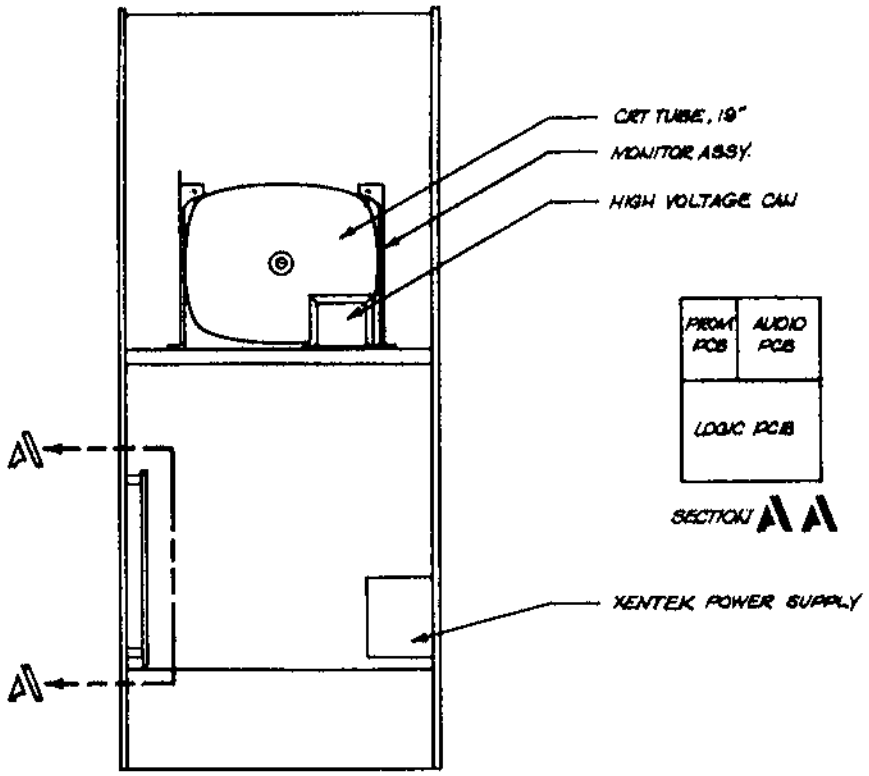

NOTES: UNLESS OTHERWISE SPECIFIED

MATERIAL:	DRAWN BY: A. Massaro	DATE 10-79	CINEMATRONICS INC. El Cajo Ca. 92020
	PROJECT ENGR: C. Williams	DATE 10-79	DWG TITLE REAR CABINET ASSY. ILLUSTRATION
	RELEASE APPROV: CSW	DATE 10-79	
FINISH:	DO NOT SCALE DWG		
	TOLERANCE: UNLESS OTHERWISE SPECIFIED		MODEL NO. / DWG SIZE C / DWG NO. MN805801 / REV A
	PROJECTION:	SCALE: NONE	CODE IDENT. / SHEET 1 OF 1

4 3 2 1

PROPRIETARY
THIS DOCUMENT IS THE PROPERTY OF CINEMATRONICS INC. AND IS NOT TO BE REPRODUCED OR DISTRIBUTED WITHOUT WRITTEN AUTHORIZATION OF CINEMATRONICS INC.

REVISIONS			
REV.	DESCRIPTION	DATE	APPROVED

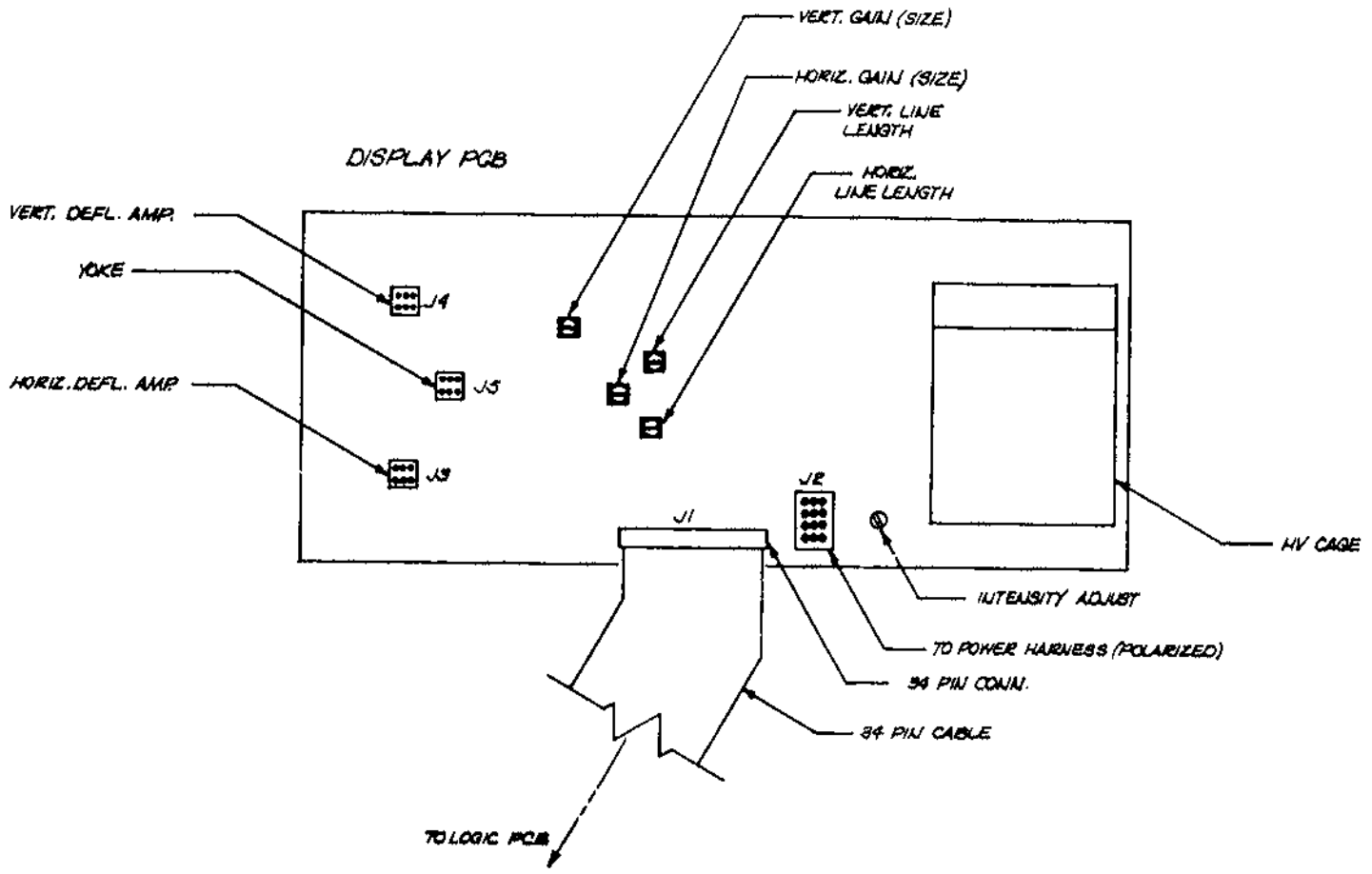

NOTES: UNLESS OTHERWISE SPECIFIED

MATERIAL:	DRAWN BY: A. Pracaw	DATE 9-24-79	CINEMATRONICS INC. El Cajon Ca. 92020
	PROJECT ENGR: C. Williams	DATE 9-79	DWG TITLE MONITOR BOARD ILLUSTRATION
FINISH: BREAK ALL SHARP EDGES AND DEBURR ALL HOLES.	RELEASE APPROV: C.E.W.	DATE 9-79	
	DO NOT SCALE DWG		
	TOLERANCE: UNLESS OTHERWISE SPECIFIED		MODEL NO. / DWG SIZE / DWG NO. MN203804 / REV F
	PROJECTION:	SCALE:	CODE IDENT. / SHEET 1 OF 1

4 3 2 1

PROPRIETARY
THIS DOCUMENT IS THE PROPERTY OF CINEMATRONICS INC. AND IS NOT TO BE REPRODUCED OR DISTRIBUTED WITHOUT WRITTEN AUTHORIZATION OF CINEMATRONICS INC.

REVISIONS			
REV	DESCRIPTION	DATE	APPROVED

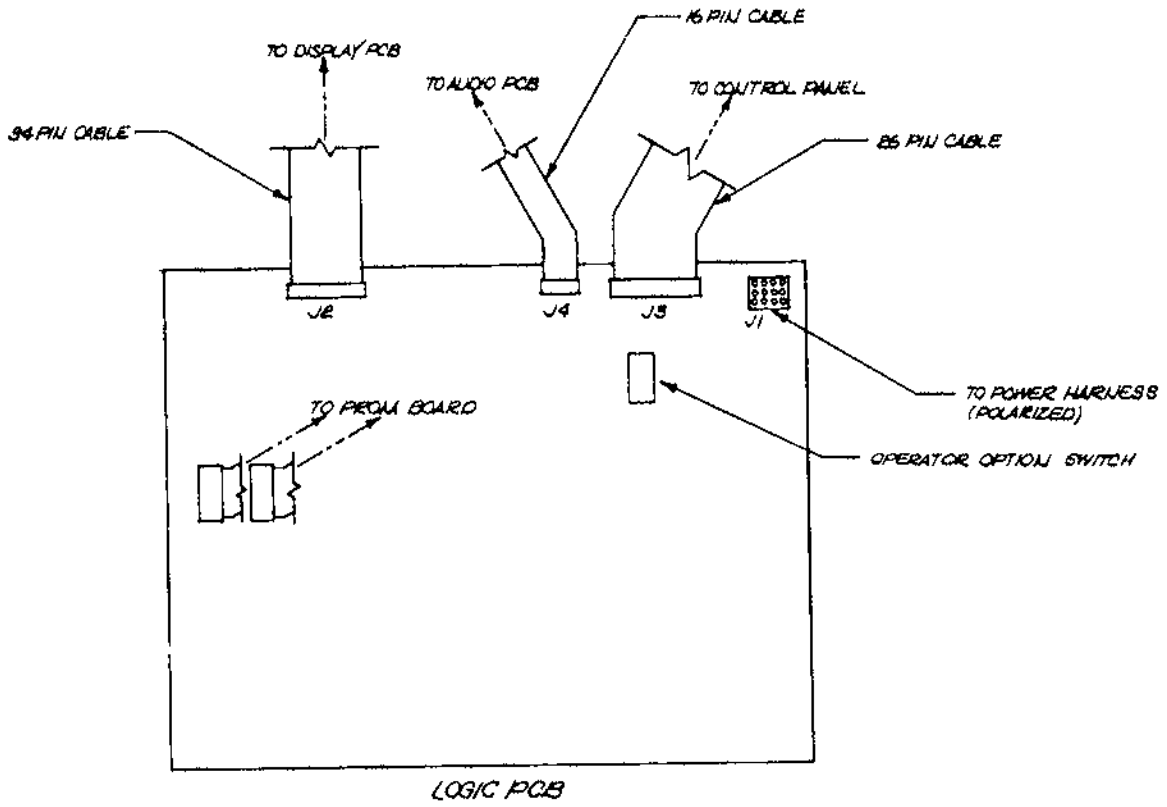

LOGIC PCB

MATERIAL:	DRAWN BY: A. Thacavu	DATE 9-2[illegible]	CINEMATRONICS INC. El Cajo Ca. 92020
	PROJECT ENGR: C. Williams	DATE 9-79	DWG TITLE C.P.U. BOARD ILLUSTRATION
FINISH: BREAK ALL SHARP EDGES AND DEBURR ALL HOLES.	RELEASE APPROV: CEW	DATE 9-79	
	DO NOT SCALE DWG		
	TOLERANCE: UNLESS OTHERWISE SPECIFIED		MODEL NO. / DWG SIZE / DWG NO. MU209803 / REV R
	PROJECTION:	SCALE:	CODE IDENT. / SHEET 1 OF 1

NOTES: UNLESS OTHERWISE SPECIFIED

PROPRIETARY
THIS DOCUMENT IS THE PROPERTY OF CINEMATRONICS INC. AND IS NOT TO BE REPRODUCED OR DISTRIBUTED WITHOUT WRITTEN AUTHORIZATION OF CINEMATRONICS INC.

REVISIONS			
REV	DESCRIPTION	DATE	APPROV

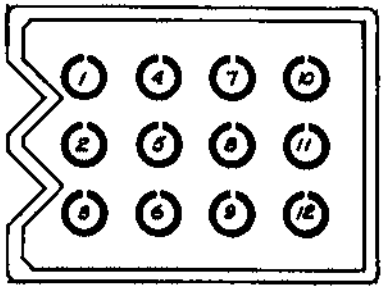

J1

J1 CONNECTOR DATA		
PIN NO.	WIRE COLOR	FUNCTION
J1-1	GRN/YEL	CHASSIS GND
J1-2	WHT	TXFMR LUG #3
⚠1 J1-3	BLK	TXFMR LUG #1
J1-4	GRN/YEL	6.3VAC GND
J1-5	ORG	6.3VAC
⚠2 J1-6	BRN	SPOT KILL (25LINE)
⚠3 J1-7	YEL	+25V
⚠3 J1-8	BLU	-25V
J1-9	RED	+5V
J1-10	GRY	+5V
J1-11	BLK	+5V RETURN
J1-12	RED	± 25 V RETURN

⚠1 8AMP INLINE FUSE.

⚠2 .5AMP INLINE FUSE.

⚠3 3AMP INLINE CIRCUIT BREAKER CB1.

⚠3 3AMP INLINE CIRCUIT BREAKER CB2.

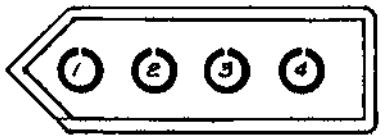

J2

	J2 CONNECTOR DATA	
PIN NO.	WIRE COLOR	FUNCTION
J2-1	BRN	TXFMR LUG #1
J2-2	ORG	TXFMR LUG #3
J2-3	RED	TXFMR LUG #2
J2-4	YEL	TXFMR LUG #4

XENTEK POWER SUPPLY
BOTH J1 & J2 AS VIEWED FROM THE FRONT OF POWER SUPPLY.

NOTES: UNLESS OTHERWISE SPECIFIED

MATERIAL:	DRAWN BY: D. Thomas	DATE 9/27	CINEMATRONICS INC.
FINISH: BREAK ALL SHARP EDGES AND DEBURR ALL HOLES.	PROJECT ENGR: C. Williams	DATE 9-29	DWG TITLE: POWER SUPPLY PINOUT ILLUSTRATION
	RELEASE APPROV: CFW	DATE 9-29	
	DO NOT SCALE DWG		
	TOLERANCE: UNLESS OTHERWISE SPECIFIED		MODEL NO. / DWG SIZE / DWG NO. MAN09807
	PROJECTION:	SCALE:	CODE IDENT. / SHEET / OF

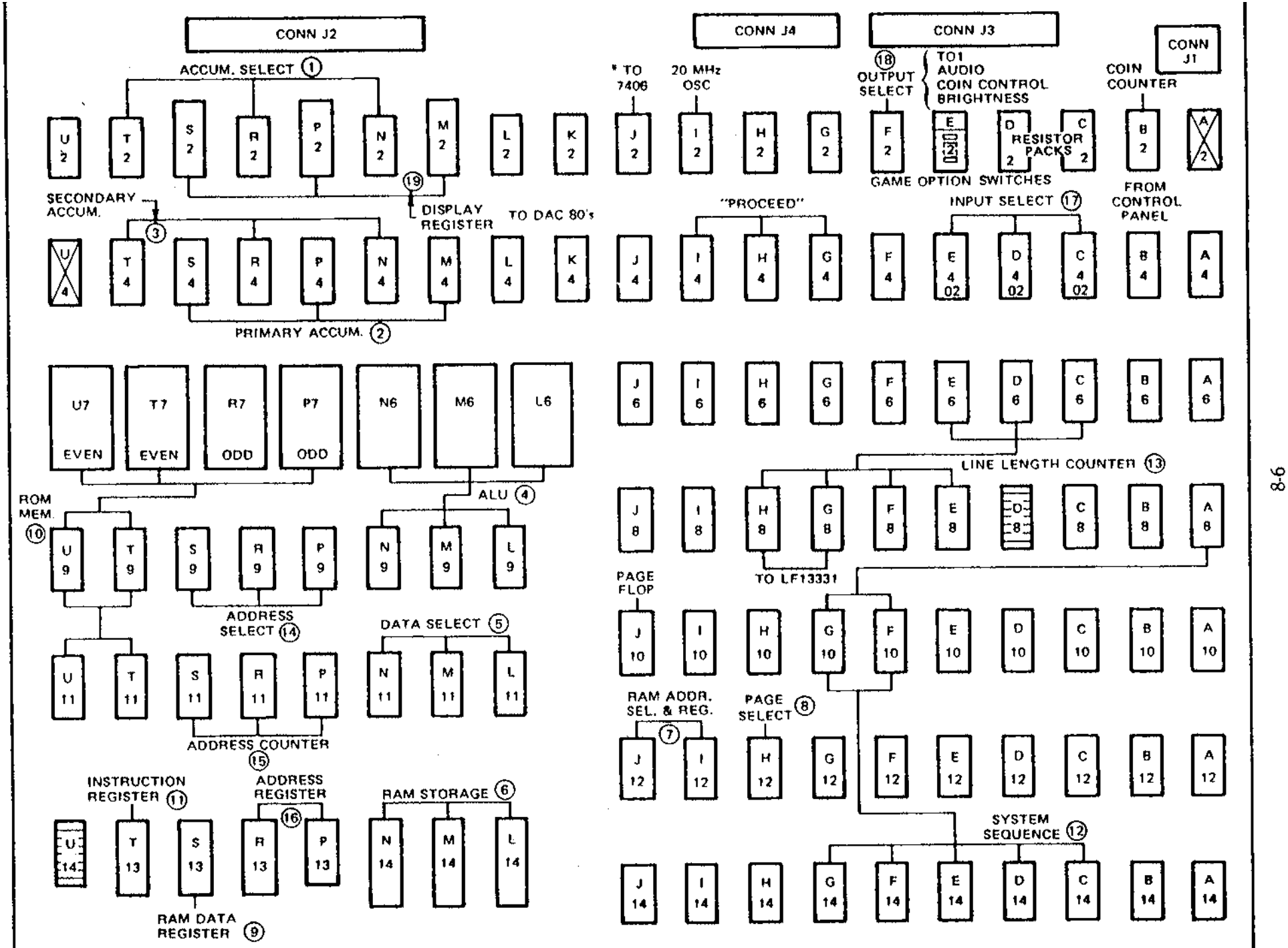

*OR 16 LEVEL INTENSITY CIRCUITRY

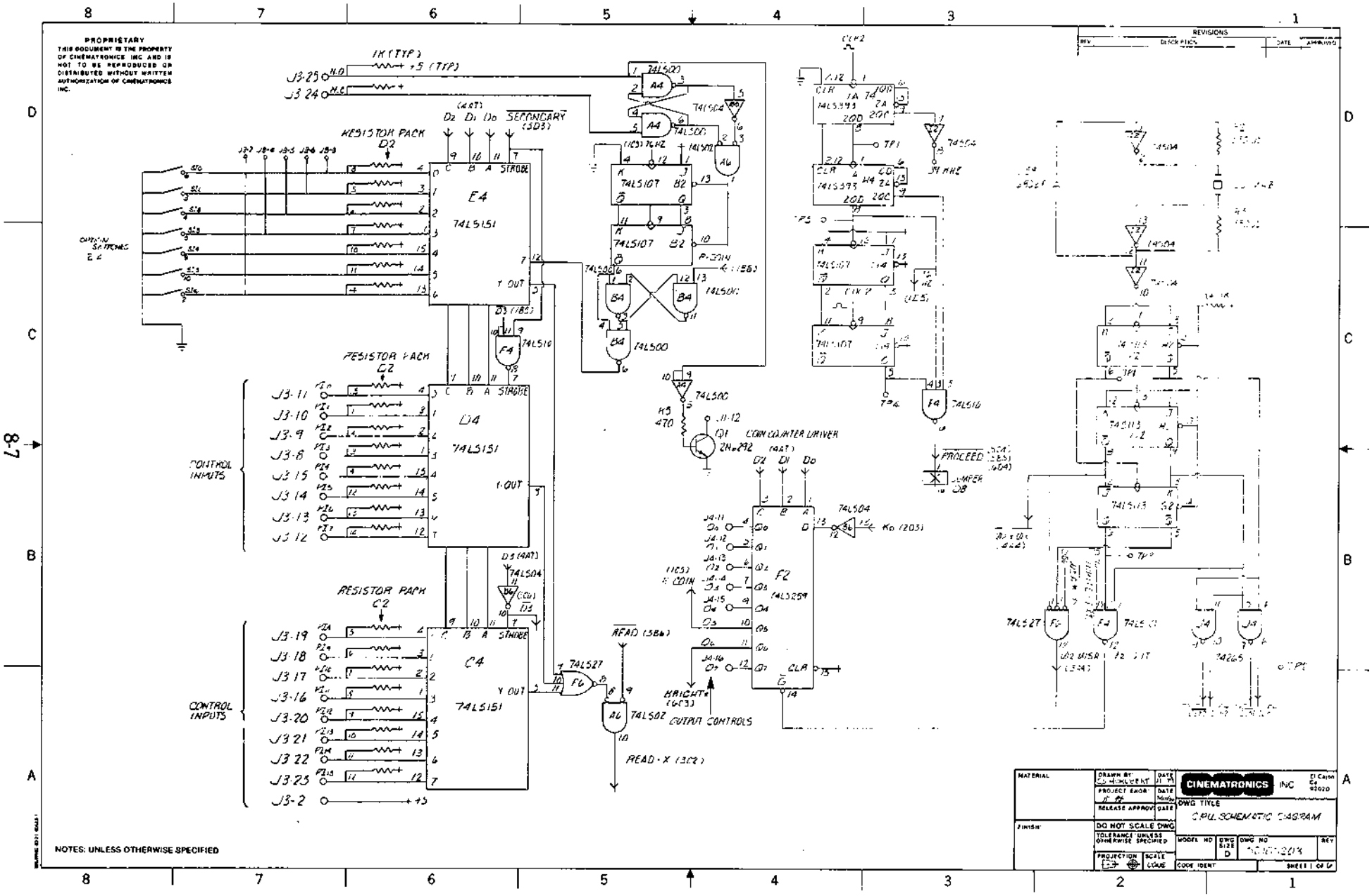
PROPRIETARY
THIS DOCUMENT IS THE PROPERTY OF CINEMATRONICS INC AND IS NOT TO BE REPRODUCED OR DISTRIBUTED WITHOUT WRITTEN AUTHORIZATION OF CINEMATRONICS INC.
REVISIONS
RESISTOR PACK D2
RESISTOR PACK C2
CONTROL INPUTS
E4
74LS151
D4
74LS151
C4
74LS151
74LS107
74LS107
74LS00
74LS04
74LS10
74LS27
74LS02
74LS393
74LS259
74LS113
74LS27
74265
COIN COUNTER DRIVER
PROCEED
OUTPUT CONTROLS
READ (3B6)
READ-X (3C2)
NOTES: UNLESS OTHERWISE SPECIFIED
MATERIAL
FINISH
DO NOT SCALE DWG
TOLERANCE UNLESS OTHERWISE SPECIFIED
CINEMATRONICS INC
DWG TITLE
CPU SCHEMATIC DIAGRAM
MODEL NO
DWG SIZE D
DWG NO
REV
CODE IDENT
SHEET 1 OF 6

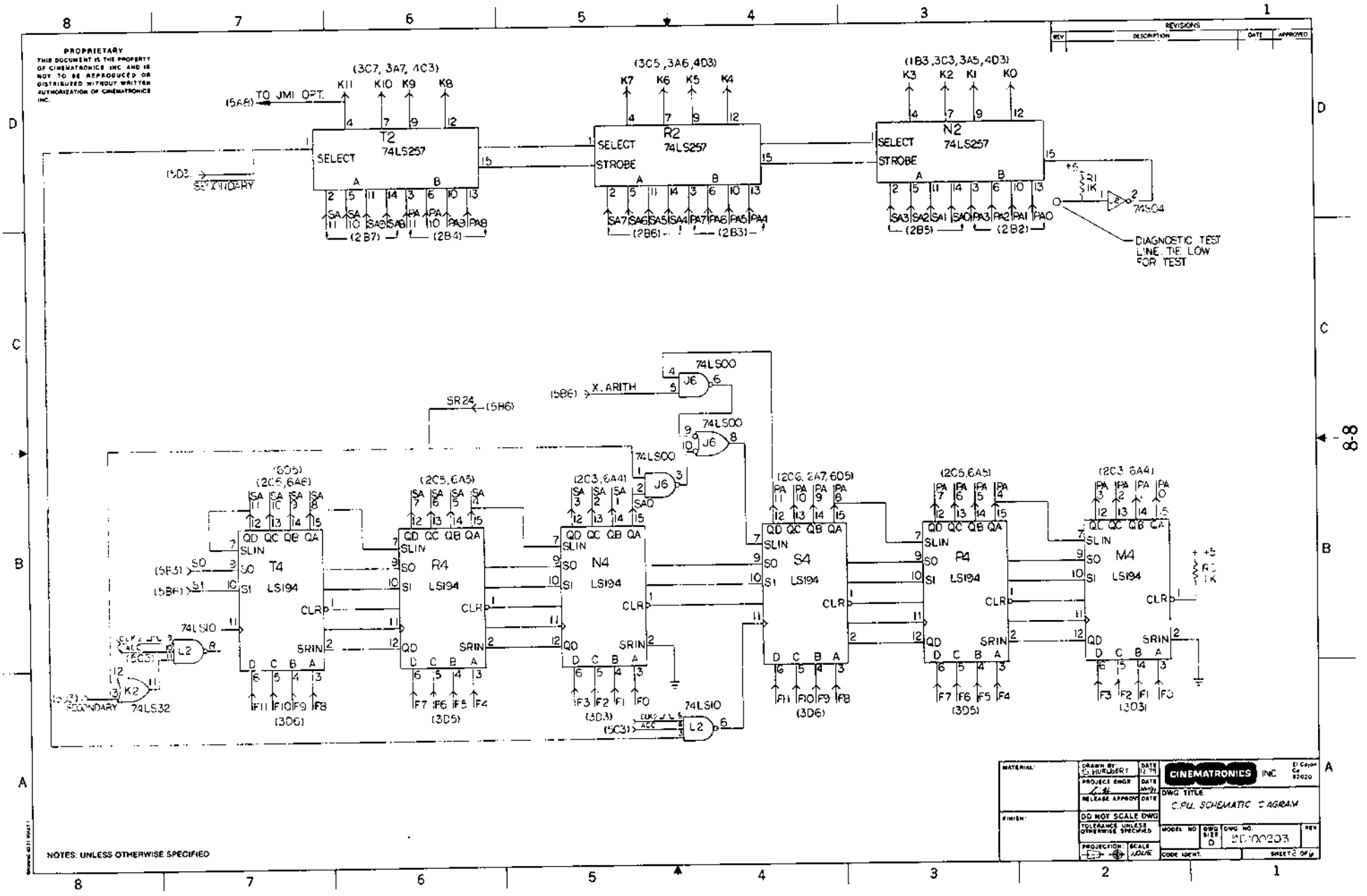
PROPRIETARY
THIS DOCUMENT IS THE PROPERTY OF CINEMATRONICS INC AND IS NOT TO BE REPRODUCED OR DISTRIBUTED WITHOUT WRITTEN AUTHORIZATION OF CINEMATRONICS INC.
REVISIONS
REV
DESCRIPTION
DATE
APPROVED
(3C7, 3A7, 4C3)
K11 K10 K9 K8
(5A8) TO JMI OPT.
T2
74LS257
SELECT
(5D3) SECONDARY
(2B7)
(2B4)
(3C5, 3A6, 4D3)
K7 K6 K5 K4
R2
74LS257
SELECT
STROBE
(2B6)
(2B3)
(1B3, 3C3, 3A5, 4D3)
K3 K2 K1 K0
N2
74LS257
SELECT
STROBE
(2B5)
(2B2)
R1
1K
74S04
DIAGNOSTIC TEST LINE. TIE LOW FOR TEST
74LS00
J6
(5B6) X. ARITH
SR24 (5B6)
(6D5)
(2C5, 6A6)
T4
LS194
(5B3) S0
(5B6) S1
74LS10
L2
(5C3)
K2
74LS32
SECONDARY
(3D6)
(2C5, 6A5)
R4
LS194
(3D5)
(2C3, 6A4)
N4
LS194
(3D3)
74LS10
(5C3)
(2C6, 2A7, 6D5)
S4
LS194
(3D6)
(2C5, 6A5)
P4
LS194
(3D5)
(2C3, 6A4)
M4
LS194
(3D3)
R3
1K
NOTES: UNLESS OTHERWISE SPECIFIED
MATERIAL:
FINISH:
DRAWN BY: S. HURLBERT
DATE 12-79
PROJECT ENGR
RELEASE APPROV
DATE
DO NOT SCALE DWG
TOLERANCE UNLESS OTHERWISE SPECIFIED
PROJECTION:
SCALE NONE
CINEMATRONICS INC
El Cajon Ca 92020
DWG TITLE
C.P.U. SCHEMATIC DIAGRAM
MODEL NO
DWG SIZE D
DWG NO. 5D100203
REV
CODE IDENT.
SHEET 2 OF 6

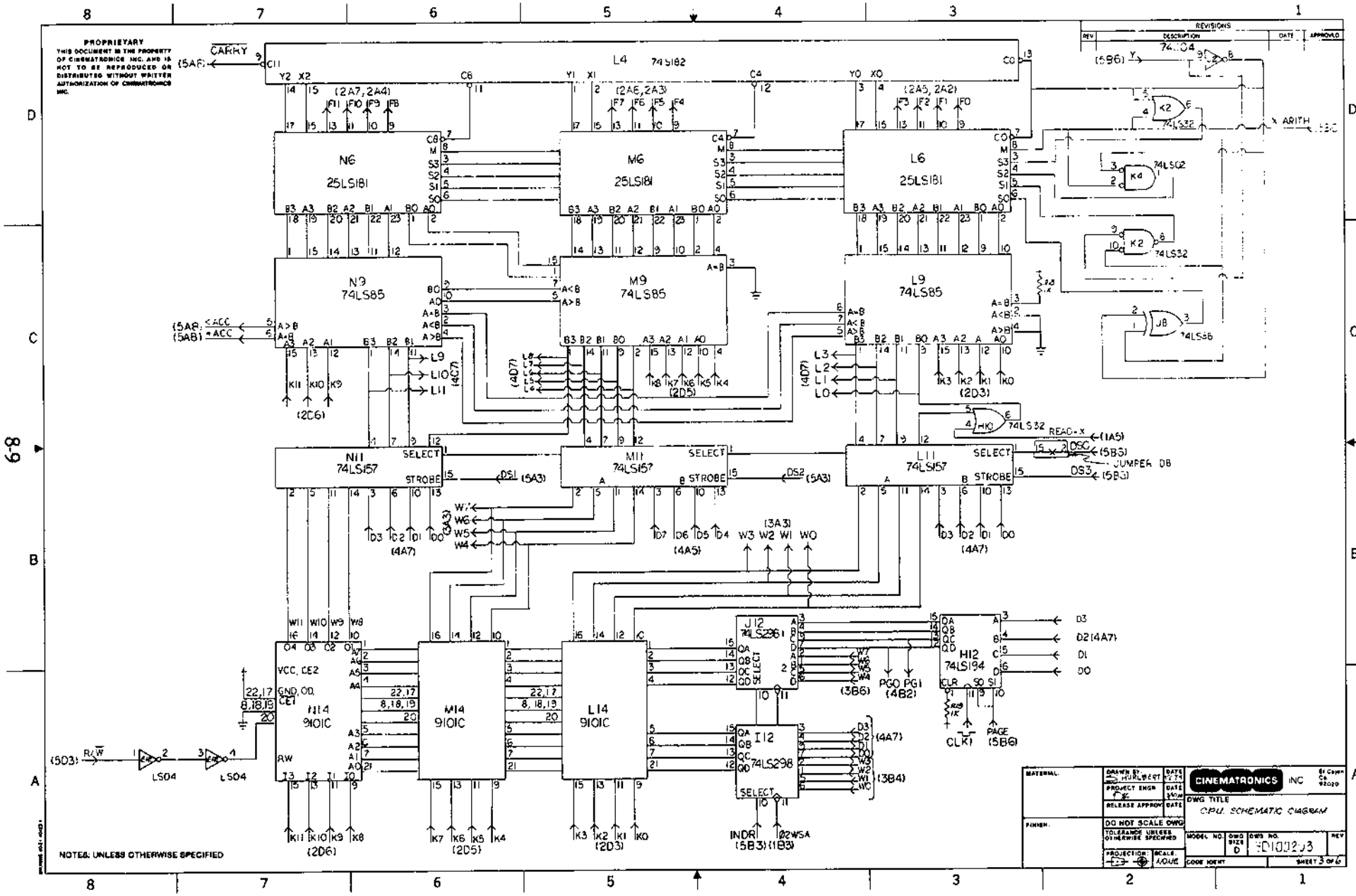
PROPRIETARY
THIS DOCUMENT IS THE PROPERTY OF CINEMATRONICS INC. AND IS NOT TO BE REPRODUCED OR DISTRIBUTED WITHOUT WRITTEN AUTHORIZATION OF CINEMATRONICS INC.
REVISIONS
REV
DESCRIPTION
DATE
APPROVED
CARRY
L4 74S182
N6 25LS181
M6 25LS181
L6 25LS181
N9 74LS85
M9 74LS85
L9 74LS85
N11 74LS157
M11 74LS157
L11 74LS157
SELECT
STROBE
READ-X
JUMPER DB
X ARITH
74LS32
74LS02
74LS86
74LS04
N14 9101C
M14 9101C
L14 9101C
J12 74LS298
I12 74LS298
H12 74LS194
LS04
PGO PG1
CLK1
PAGE
INDR
Ø2WSA
NOTES: UNLESS OTHERWISE SPECIFIED
MATERIAL
FINISH
DRAWN BY HURLBERT
PROJECT ENGR
RELEASE APPROV
DO NOT SCALE DWG
TOLERANCE UNLESS OTHERWISE SPECIFIED
PROJECTION
SCALE NONE
CINEMATRONICS INC
DWG TITLE
CPU SCHEMATIC DIAGRAM
MODEL NO.
DWG SIZE D
DWG NO. SD100203
REV
CODE IDENT
SHEET 3 OF 6

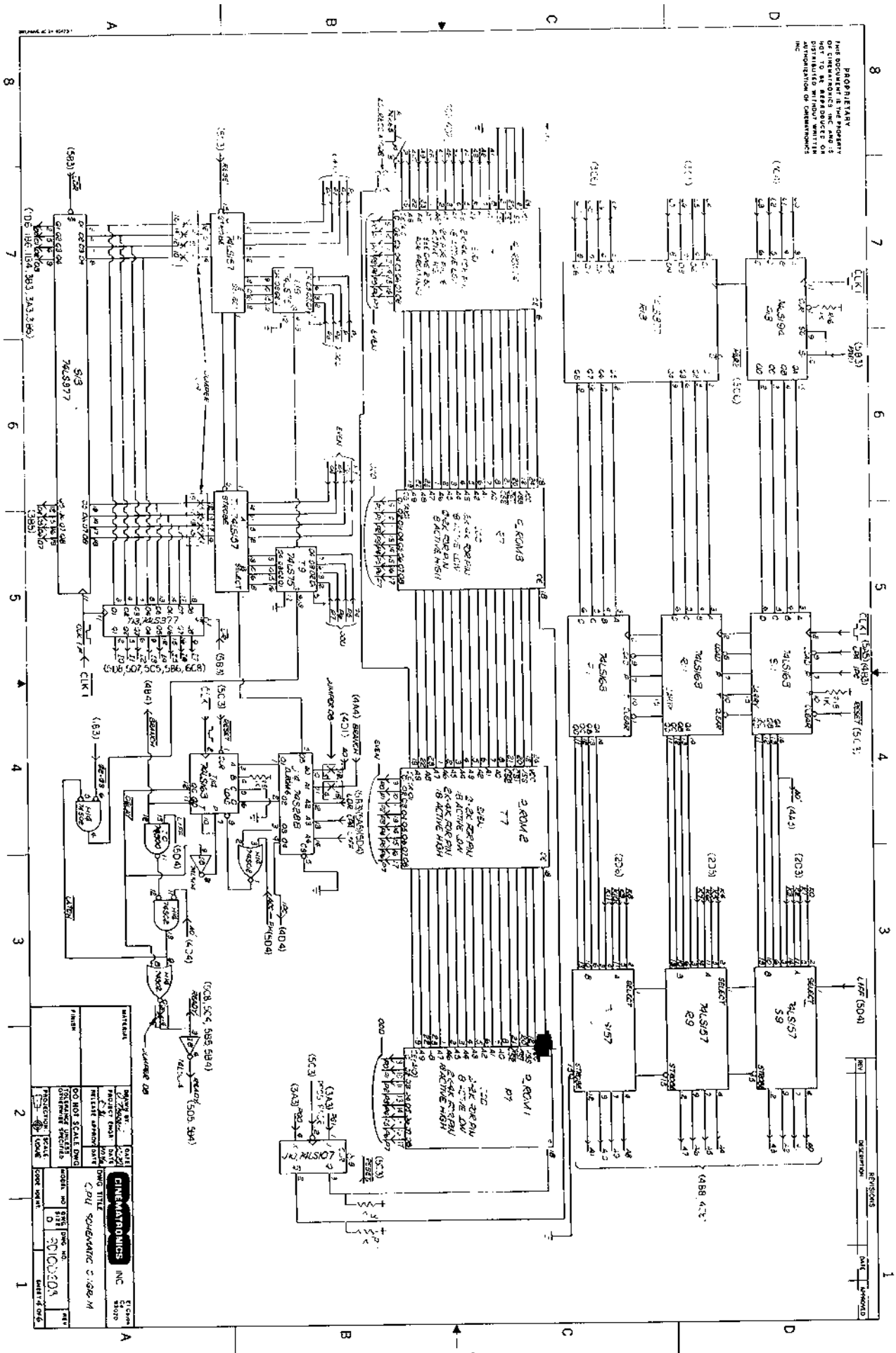
PROPRIETARY
CINEMATRONICS
INC
DO NOT SCALE DWG
DWG TITLE
C.P.U. SCHEMATIC DIAGRAM
REVISIONS

PROPRIETARY
THIS DOCUMENT IS THE PROPERTY OF CINEMATRONICS INC. AND IS NOT TO BE REPRODUCED OR DISTRIBUTED WITHOUT WRITTEN AUTHORIZATION OF CINEMATRONICS INC.

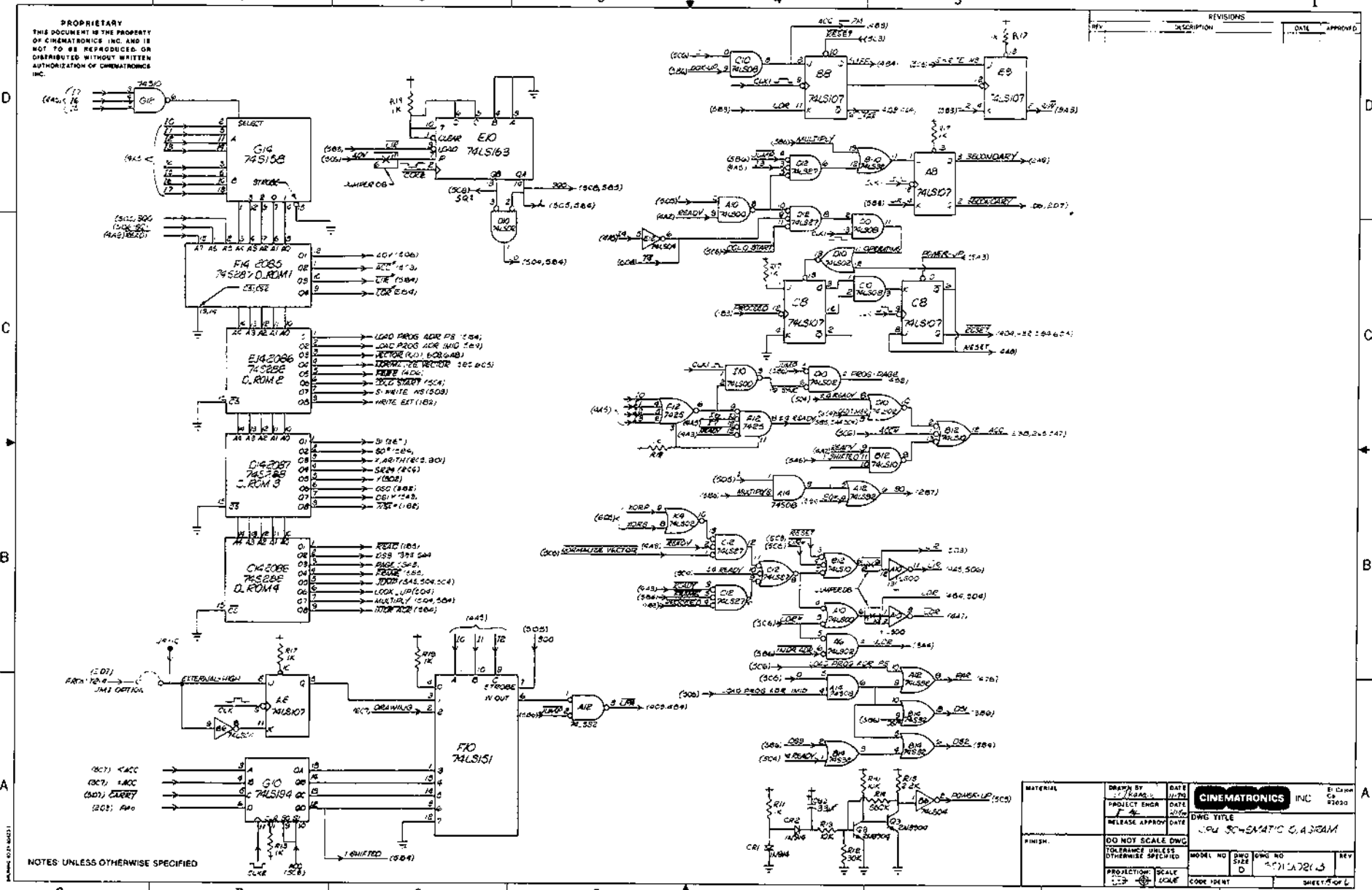
REVISIONS
REV
INSCRIPTION
DATE
APPROVED
SELECT
STROBE
LOAD
CLEAR
CLOCK
RESET
PRESET
CLK
D
Q
J
K
SELECT
G1C 74S158
E1D 74LS163
F1A 2085 74S287 D.ROM 1
E1A 2086 74S288 D.ROM 2
D1A 2087 74S288 D.ROM 3
C1A 2088 74S288 D.ROM 4
F1D 74LS151
G1D 74LS194
A1E 74LS107
B1D 74LS138
A1D 74LS08
D1D 74LS02
C1D 74LS08
C1B 74LS07
D1C 74LS08
I1D 74LS00
D1B 74LS00
E1B 74LS10
A1B 74LS32
B1B 74LS32
C1A 74LS02
A1C 74LS08
B1C 74LS38
A1B 74LS00
B1A 74LS04
E1C 74LS27
C1C 74LS27
E1B 74LS10
K1C 74LS02
I1C 74LS00
D1C 74LS08
E1A 74LS04
A1A 74LS00
D1A 74LS27
E1C 74LS27
A1B 74LS32
B1A 74LS04

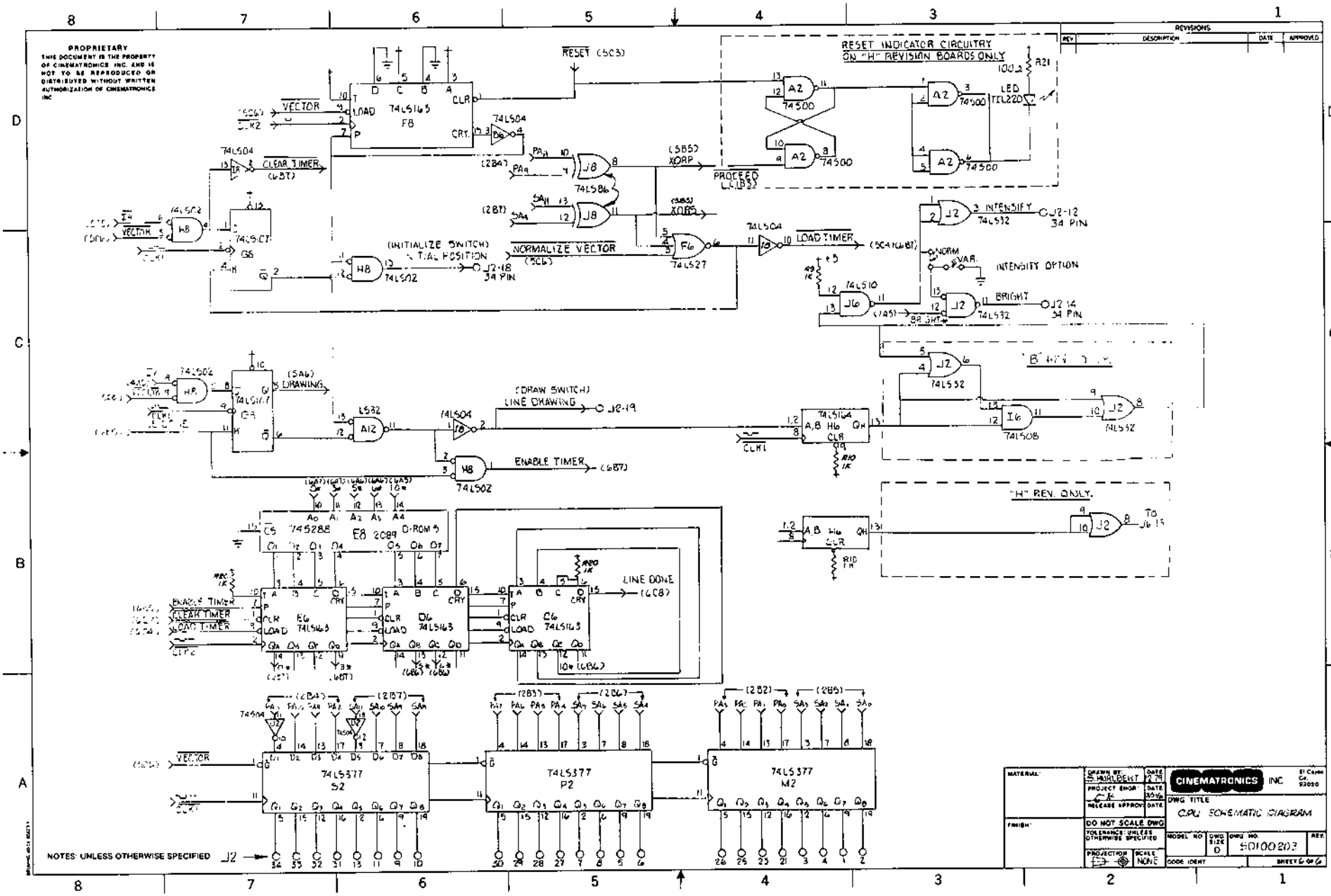
PROPRIETARY
THIS DOCUMENT IS THE PROPERTY OF CINEMATRONICS INC. AND IS NOT TO BE REPRODUCED OR DISTRIBUTED WITHOUT WRITTEN AUTHORIZATION OF CINEMATRONICS INC.
RESET INDICATOR CIRCUITRY ON "H" REVISION BOARDS ONLY
RESET (5C3)
74LS163 F8
VECTOR
CLEAR TIMER (6B7)
74LS04
74LS86
XORP
PROCEED
XORS
(INITIALIZE SWITCH) INITIAL POSITION
NORMALIZE VECTOR (5C6)
74LS02
74LS27
LOAD TIMER
INTENSITY
INTENSITY OPTION
BRIGHT
74LS10
74LS32
74LS08
(DRAW SWITCH) LINE DRAWING
ENABLE TIMER
74LS164
"H" REV. ONLY
74S288 E8 2089 D-ROM 5
E6 74LS163
D6 74LS163
C6 74LS163
LINE DONE (6C8)
74LS377 S2
74LS377 P2
74LS377 M2
NOTES: UNLESS OTHERWISE SPECIFIED
REVISIONS
REV
DESCRIPTION
DATE
APPROVED
MATERIAL
FINISH
DRAWN BY: S. HORLBERT
PROJECT ENGR
RELEASE APPROV
DO NOT SCALE DWG
TOLERANCE: UNLESS OTHERWISE SPECIFIED
PROJECTION
SCALE NONE
CINEMATRONICS INC
El Cajon Ca. 92020
DWG TITLE
CPU SCHEMATIC DIAGRAM
MODEL NO
DWG SIZE D
DWG NO. 50100203
REV.
CODE IDENT
SHEET 6 OF 6

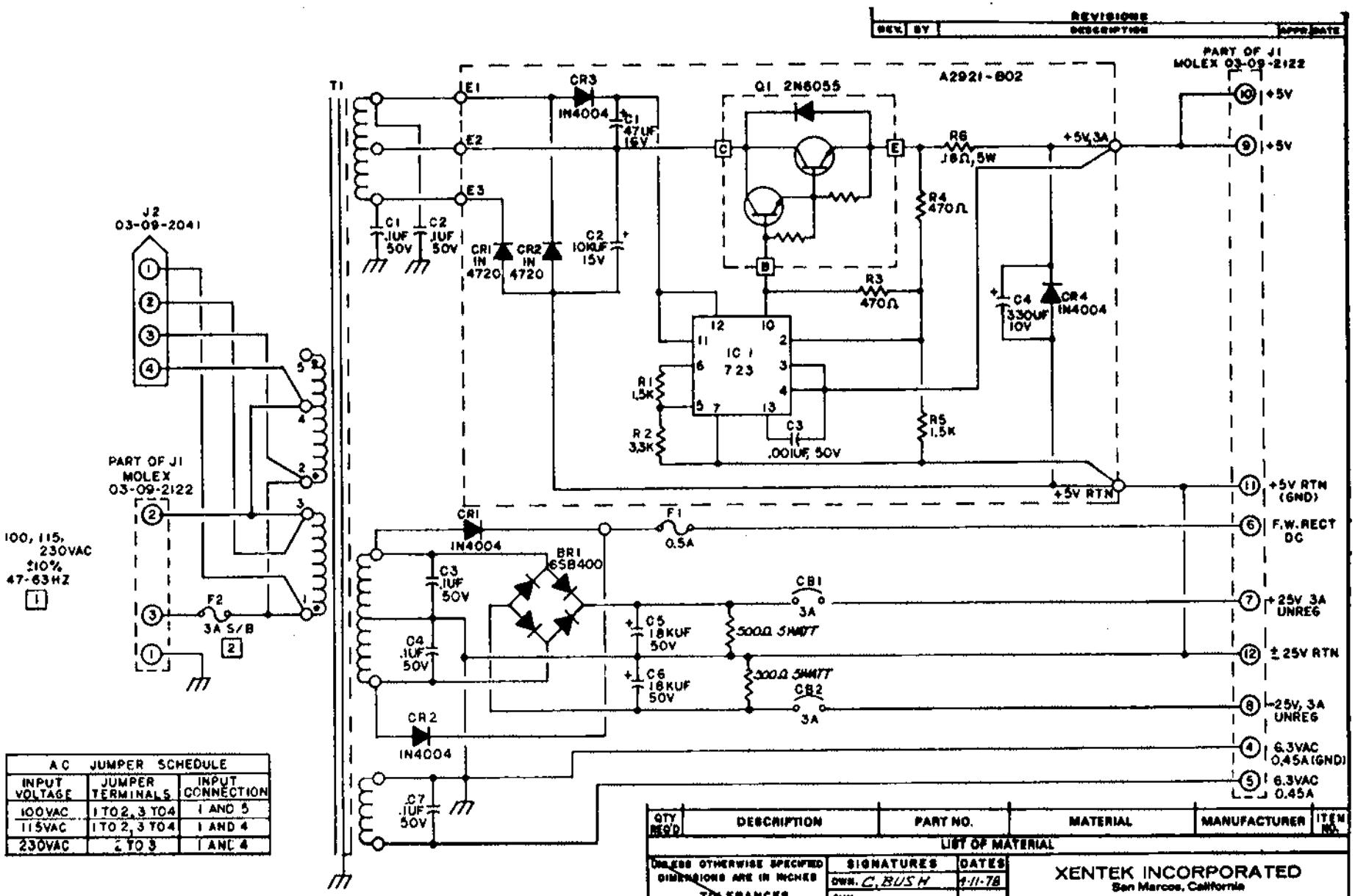

A C JUMPER SCHEDULE		
INPUT VOLTAGE	JUMPER TERMINALS	INPUT CONNECTION
100VAC	1 TO 2, 3 TO 4	1 AND 5
115VAC	1 TO 2, 3 TO 4	1 AND 4
230VAC	2 TO 3	1 AND 4

2 RECOMMENDED FUSING; 3A SLO BLO FOR 115V.
1.5A SLO BLO FOR 230V

1 TRANSFORMER SHOWN WIRED FOR 115VAC OPERATION

NOTES:

QTY REQ'D	DESCRIPTION	PART NO.	MATERIAL	MANUFACTURER	ITEM NO.

LIST OF MATERIAL

UNLESS OTHERWISE SPECIFIED DIMENSIONS ARE IN INCHES
TOLERANCES
FRAC. ±1/32 DEC. .XX ±.05 .XXX ±.010 ANGLES ±1/2°

MATERIAL:

FINISH:

SIGNATURES	DATES
DWN. C. BUSH	4-11-78
CHK.	
DSGN. M. DEICHER	4/15/78
ENGR.	
APPR.	4/15/78

PROPRIETARY NOTICE
ALL PATENT OR OTHER PROPRIETARY RIGHTS PERTAINING TO THE ITEMS SOLD HEREIN, DRG SHALL REMAIN THE SOLE PROPERTY OF XENTEK INCORPORATED EXCEPT THAT THE PURCHASER SHALL HAVE THE RIGHT TO USE SUCH ITEMS FOR THEIR INTENDED PURPOSE.

DO NOT SCALE DWG.

XENTEK INCORPORATED
San Marcos, California

TITLE
SCHEMATIC, POWER SUPPLY
CINEMATRONICS

CODE IDENT	SIZE	DWG. NO.	REV.
53279	C	C2921-S01	A

SCALE: WEIGHT: SHEET 1 OF 1

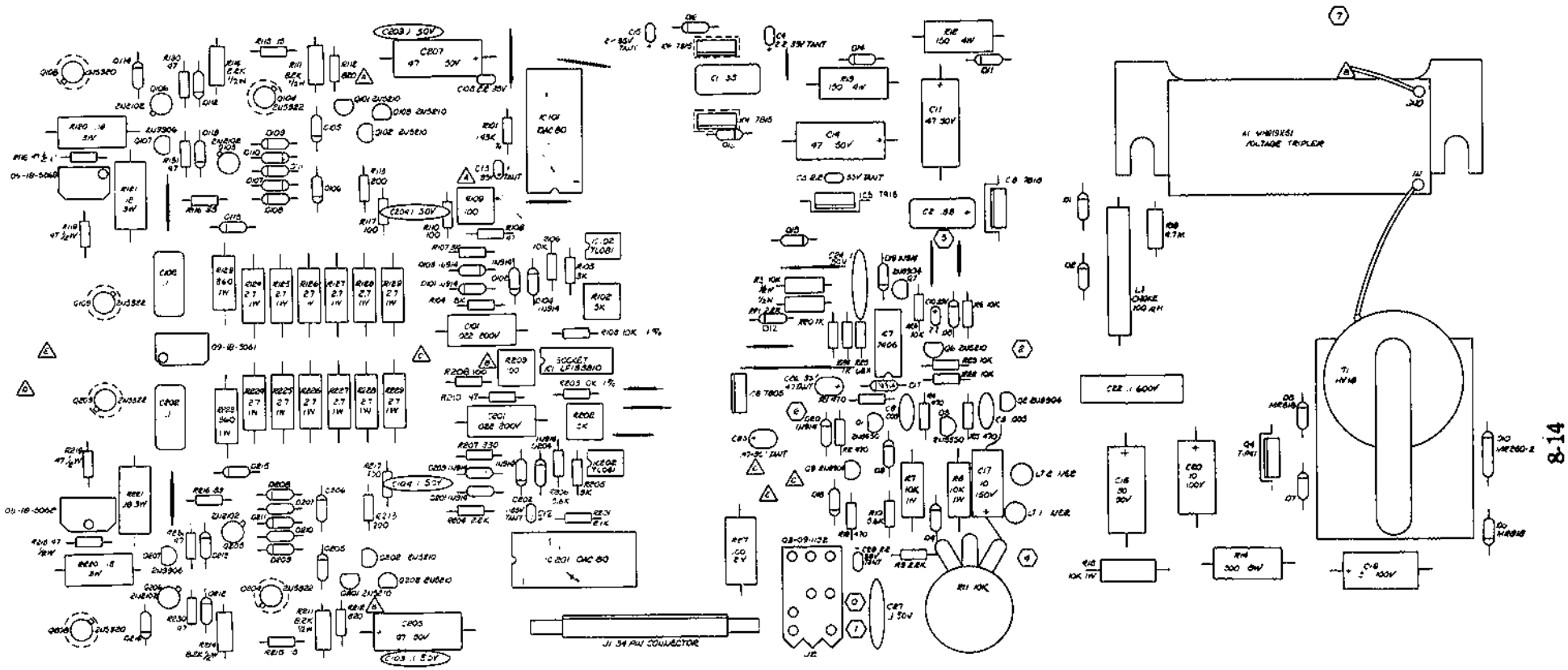

A = 22 BROWN 2"
B = 22 BROWN 3¼" (RED)
C = 18 BLACK 4¾"
D = 18 RED 9"
E = 18 BLUE 9"

0 BLACK 0¼"
1 BROWN 0¼" } TWIST TOGETHER
2 RED 5"
4 YELLOW 10"
5 GREEN 3"
6 BLUE 11½"
7 WHITE 15"

3 ALL DIODES ARE IN4003 UNLESS OTHERWISE SPECIFIED.
2 ALL RESISTOR VALUES ARE IN OHM ¼W UNLESS OTHERWISE SPECIFIED
1 ALL CAPACITOR VALUES ARE IN µF

MATERIAL:	DRAWN BY:	DATE	CINEMATRONICS INC
	PROJECT ENGR:	DATE	
FINISH: BREAK ALL SHARP EDGES AND DEBURR ALL HOLES.	RELEASE APPROV:	DATE	DWG TITLE: DISPLAY P.C.B ASSY
	DO NOT SCALE DWG		
	TOLERANCE: UNLESS OTHERWISE SPECIFIED		MODEL NO. / DWG SIZE / DWG NO. AE 205203 / REV A
	PROJECTION:	SCALE: NONE	CODE IDENT. / SHEET 1 OF 1

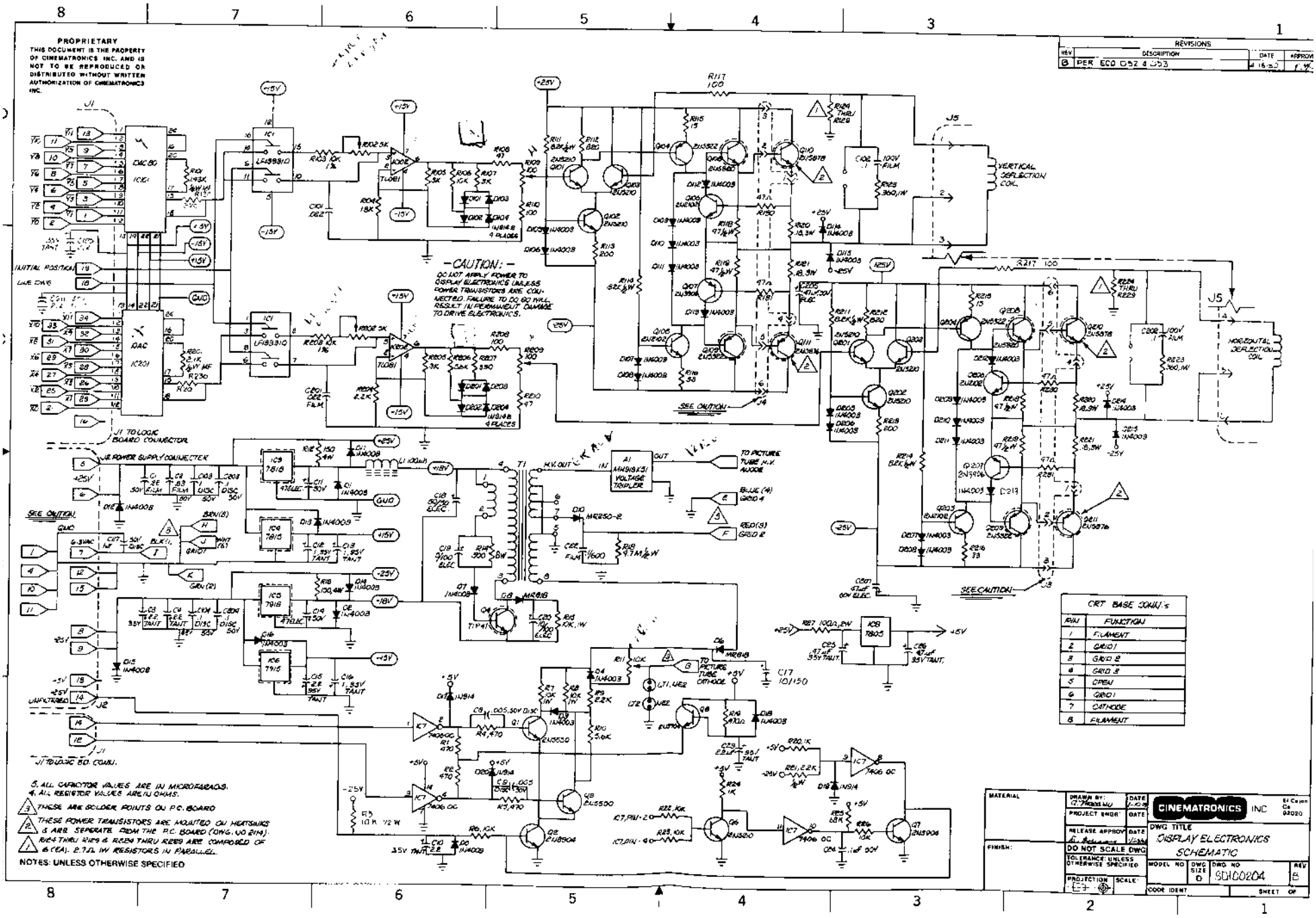
PROPRIETARY
THIS DOCUMENT IS THE PROPERTY OF CINEMATRONICS INC. AND IS NOT TO BE REPRODUCED OR DISTRIBUTED WITHOUT WRITTEN AUTHORIZATION OF CINEMATRONICS INC.
REVISIONS
REV
DESCRIPTION
DATE
APPROV
B
PER ECO 052 & 053
-CAUTION:-
DO NOT APPLY POWER TO DISPLAY ELECTRONICS UNLESS POWER TRANSISTORS ARE CONNECTED. FAILURE TO DO SO WILL RESULT IN PERMANENT DAMAGE TO DRIVE ELECTRONICS.
VERTICAL DEFLECTION COIL
HORIZONTAL DEFLECTION COIL
J1 TO LOGIC BOARD CONNECTOR
J2 POWER SUPPLY CONNECTER
J1 TO LOGIC BD. CONN.
SEE CAUTION
TO PICTURE TUBE H.V. ANODE
TO PICTURE TUBE CATHODE
BLUE (4) GRID 4
RED (3) GRID 2
CRT BASE CONN.'s
PIN
FUNCTION
1 FILAMENT
2 GRID 1
3 GRID 2
4 GRID 3
5 OPEN
6 GRID 1
7 CATHODE
8 FILAMENT
5. ALL CAPACITOR VALUES ARE IN MICROFARADS.
4. ALL RESISTOR VALUES ARE IN OHMS.
3 THESE ARE SOLDER POINTS ON P.C. BOARD
2 THESE POWER TRANSISTORS ARE MOUNTED ON HEATSINKS & ARE SEPERATE FROM THE P.C. BOARD (DWG. NO 2114).
1 R124 THRU R129 & R224 THRU R229 ARE COMPOSED OF 6 (EA). 2.7Ω 1W RESISTORS IN PARALLEL.
NOTES: UNLESS OTHERWISE SPECIFIED
MATERIAL
FINISH:
DRAWN BY:
PROJECT ENGR
RELEASE APPROV
DO NOT SCALE DWG
TOLERANCE: UNLESS OTHERWISE SPECIFIED
PROJECTION
SCALE
CINEMATRONICS INC
El Cajon Ca 92020
DWG TITLE
DISPLAY ELECTRONICS SCHEMATIC
MODEL NO
DWG SIZE D
DWG NO SD100204
REV B
CODE IDENT
SHEET OF

PROPRIETARY
THIS DOCUMENT IS THE PROPERTY OF CINEMATRONICS INC. AND IS NOT TO BE REPRODUCED OR DISTRIBUTED WITHOUT WRITTEN AUTHORIZATION OF CINEMATRONICS INC.

REVISIONS			
REV	DESCRIPTION	DATE	APPROVED

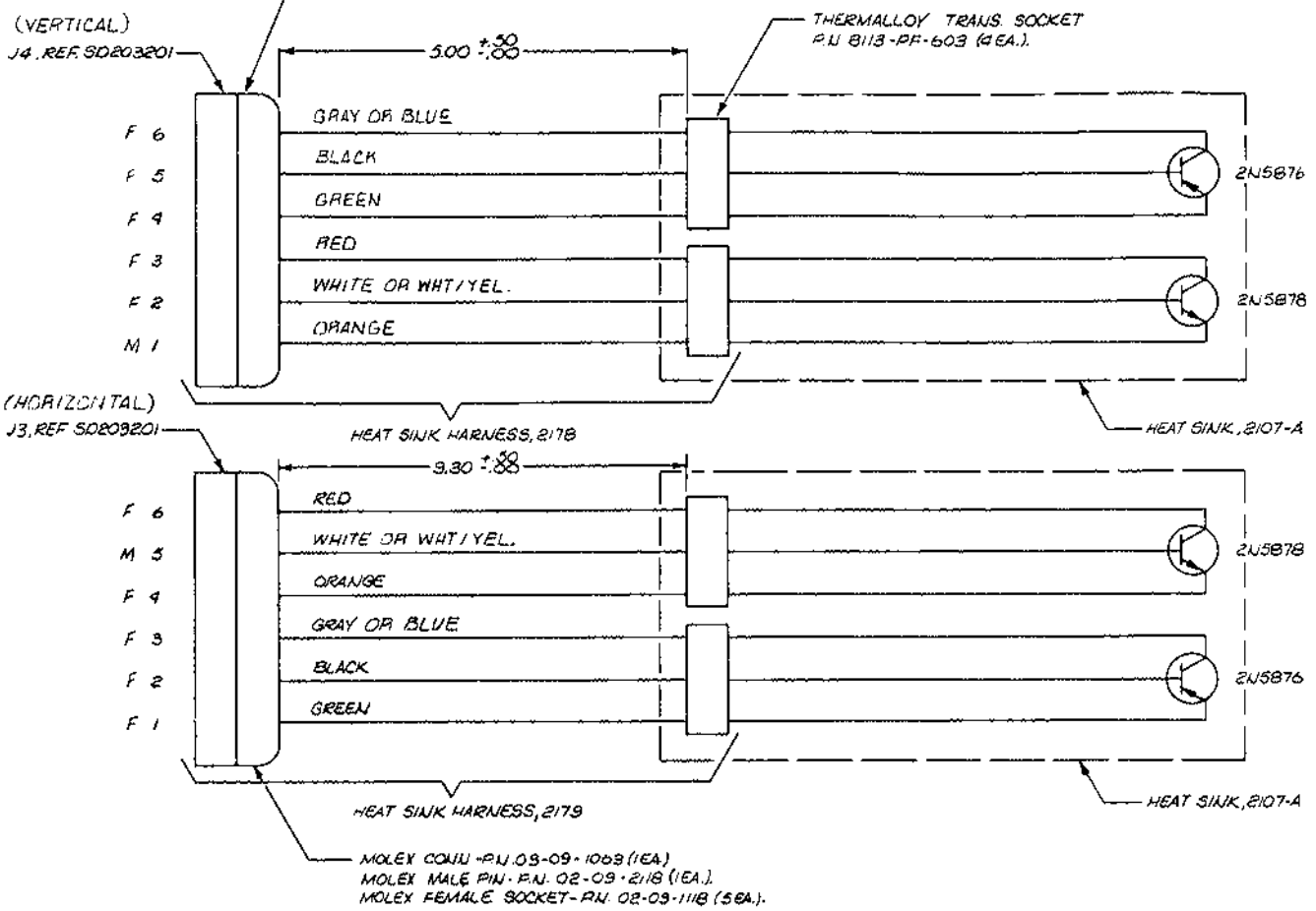

NOTES: UNLESS OTHERWISE SPECIFIED

MATERIAL:	DRAWN BY: C. Thacker	DATE 8-7-79	CINEMATRONICS INC. El Cajon Ca. 92020
FINISH: BREAK ALL SHARP EDGES AND DEBURR ALL HOLES.	PROJECT ENGR:	DATE	DWG TITLE SCHEMATIC, VERTICAL & HORIZONTAL HEAT SINK ASSY.
	RELEASE APPROV:	DATE	
	DO NOT SCALE DWG		MODEL NO. / DWG SIZE B / DWG NO. SD203-415 / REV. A
	TOLERANCE: UNLESS OTHERWISE SPECIFIED		CODE IDENT. / SHEET 1 OF 1
	PROJECTION:	SCALE: NONE	

PROPRIETARY
THIS DOCUMENT IS THE PROPERTY OF CINEMATRONICS INC AND IS NOT TO BE REPRODUCED OR DISTRIBUTED WITHOUT WRITTEN AUTHORIZATION OF CINEMATRONICS INC

REVISIONS			
REV	DESCRIPTION	DATE	APPROVED

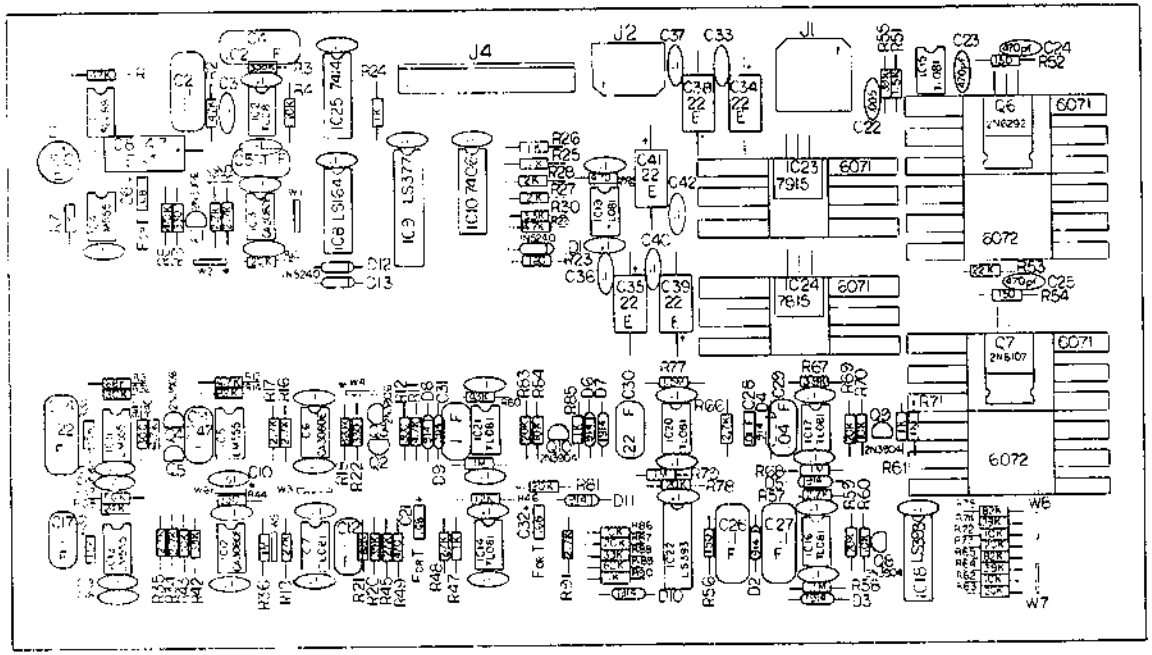

CAPACITOR LEGEND	
E	ELECTROLYTIC
F	FILM
T	TANT
UNMARKED	DISC

3. * DENOTES SIDE OF JUMPER CONNECTED TO RES.
4. CAP CAN BE SUBSTITUTED IF MORE THAN ONE LETTER IS USED
4. CAP WITHOUT REF DES. ARE BYPASS CAPS.
3. ALL CAP. VALUES ARE IN PF.
2. ALL RES VALUES ARE IN OHM, 1/4W 5%
ALL DIODES MARKED 914 ARE IN914
NOTES UNLESS OTHERWISE SPECIFIED

MATERIAL	DRAWN BY: S. Kerry H.	DATE 1-80	CINEMATRONICS INC 21 Cajon Ca 92020
	PROJECT ENGR:	DATE	DWG TITLE AUDIO BOARD ASSY. P.P. OFF
	RELEASE APPROV:	DATE	
FINISH	DO NOT SCALE DWG		
	TOLERANCE UNLESS OTHERWISE SPECIFIED		MODEL NO. / DWG SIZE D / DWG NO AE2C7201 / REV A
	PROJECTION	SCALE 2:1	CODE IDENT / SHEET OF 1

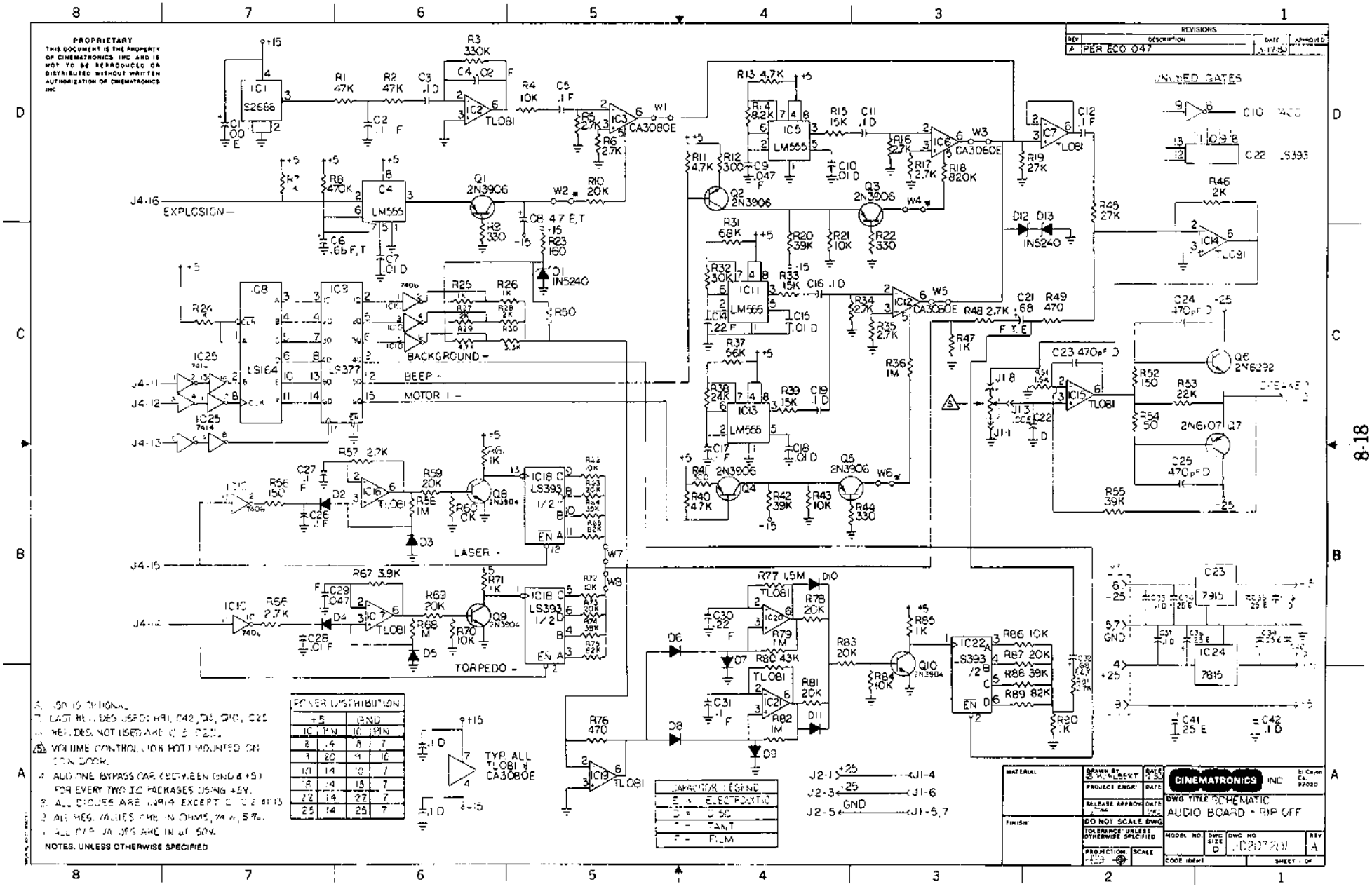
PROPRIETARY
THIS DOCUMENT IS THE PROPERTY OF CINEMATRONICS INC AND IS NOT TO BE REPRODUCED OR DISTRIBUTED WITHOUT WRITTEN AUTHORIZATION OF CINEMATRONICS INC
REVISIONS
REV DESCRIPTION DATE APPROVED
A PER ECO 047
UNUSED GATES
EXPLOSION -
BACKGROUND -
BEEP -
MOTOR 1 -
LASER -
TORPEDO -
POWER DISTRIBUTION
+5 GND
IC PIN IC PIN
8 14 8 7
9 20 9 16
10 14 10 7
12 14 12 7
22 14 22 7
25 14 25 7
TYP ALL TL081 & CA3080E
CAPACITOR LEGEND
E - ELECTROLYTIC
D - DISC
T - TANT
F - FILM
J2-1 +25 J1-4
J2-3 -25 J1-6
J2-5 GND J1-5,7
NOTES, UNLESS OTHERWISE SPECIFIED
CINEMATRONICS INC
DWG TITLE SCHEMATIC
AUDIO BOARD - RIP OFF
DO NOT SCALE DWG
8-18

PROPRIETARY
THIS DOCUMENT IS THE PROPERTY OF CINEMATRONICS INC. AND IS NOT TO BE REPRODUCED OR DISTRIBUTED WITHOUT WRITTEN AUTHORIZATION OF CINEMATRONICS INC.

INTERCONNECT P.C. CARD
MOUNTED TO SIDE OF FRONT PANEL

REVISIONS			
REV	DESCRIPTION	DATE	APPROVED

J3

11	P0	TO PLAYER CONTROL SWITCHES
10	P1	
9	P2	
8	P3	
15	P4	
14	P5	
13	P6	N/C
12	P7	N/C
19	P8	N/C
18	P9	N/C
17	P10	N/C
16	P11	N/C
20	P12	TO PLAYER CONTROL SWITCHES
21	P13	
22	P14	
23	P15	
3	S0	N/C
6	S1	N/C
5	S2	N/C
4	S3	N/C
7	S6	N/C
1	SPARE 1	N/C
2	SPARE 2	N/C
26	GND	
	GND	
25	NO	P1-2
24	NC	P1-3

RIBBON CABLE TO CPU

PLAYER CONTROL PANEL
REAR VIEW

FIRST PLAYER				ONE START	SECOND PLAYER			
FIRE	FORWARD	RIGHT	LEFT		FIRE	FORWARD	RIGHT	LEFT
P13	P15	P14	P12	P1	P5	P4	P2	P0
				TWO START P3				

COIN SWITCHES
REAR VIEW

NC, NO, COM

SWITCHES MOUNTED ON COIN DOOR

J1: 1, 2, 3 → P1: 1, 2, 3

NOTES: UNLESS OTHERWISE SPECIFIED

MATERIAL:	DRAWN BY: Sherry H.	DATE 3-80	CINEMATRONICS INC El Cajon Ca. 92020
	PROJECT ENGR:	DATE	DWG TITLE PLAYER CONTROL & COIN MECH. WIRING DIAGRAM
	RELEASE APPROV:	DATE 3/80	
FINISH:	DO NOT SCALE DWG		MODEL NO. / DWG SIZE C / DWG NO. SD207200 / REV A
	TOLERANCE: UNLESS OTHERWISE SPECIFIED		
	PROJECTION:	SCALE: NONE	CODE IDENT. / SHEET 1 OF 1

PROPRIETARY
THIS DOCUMENT IS THE PROPERTY OF CINEMATRONICS INC. AND IS NOT TO BE REPRODUCED OR DISTRIBUTED WITHOUT WRITTEN AUTHORIZATION OF CINEMATRONICS INC.

REVISIONS			
REV	DESCRIPTION	DATE	APPROVED

WIRE LIST

CONNECTOR	FROM	TO	COLOR	AWG.	PIN	LENGTH	REMARKS
POWER SUPPLY H1	H1-1	LAMP	BLACK	18	MALE		TWISTED - 1 PER INCH
	H1-2	LAMP	WHITE	18	"		
	H1-3						NOT USED
	H1-4						NOT USED
POWER SUPPLY H2	H2-1	AC LINE CORD w/PLUG	GREEN	18 X 3	MALE		
	H2-2		WHITE		"		
	H2-3		BLACK		"		
	H2-4	H3-1	BROWN	22	"		TWISTED - 1 PER INCH. 6.3 VAC
	H2-5	H3-7	WHITE	22	"		
	H2-6	H3-14	YELLOW	22	"		SPOT KILL
	H2-7	H3-6	RED	18	"		+25
	H2-7	H4-4	RED	22	"		+25
	H2-8	H3-8	BLUE	18	"		-25
	H2-8	H4-6	BLUE	22	"		-25
	H2-9	H3-13	ORANGE	22	"		+5
	H2-9	H4-9	ORANGE	22	"		+5
	H2-10	H6-10	ORANGE	18	"		+5
	H2-11	H3-15	BLACK	18	"		GND
	H2-11	H4-7	BLACK	18	"		GND
	H2-12	H6-4	BLACK	18	"		GND
DISPLAY H3	H3-1	H2-4			FEMALE		REF. 6.3 VAC
	H3-2						NOT USED
	H3-3						NOT USED
	H3-4						NOT USED
	H3-5						NOT USED
	H3-6	H2-7			FEMALE		REF. +25
	H3-7	H2-5			FEMALE		REF. 6.3 VAC
	H3-8	H2-8			FEMALE		REF. -25
	H3-9						NOT USED
	H3-10						NOT USED
	H3-11						NOT USED
	H3-12	H6-5	BLACK	18	FEMALE		GND
	H3-13	H2-9			FEMALE		REF. +5
	H3-14	H2-6			FEMALE		REF. SPOT KILL
	H3-15	H2-11			FEMALE		REF. GND

WIRE LIST

CONNECTOR	FROM	TO	COLOR	AWG.	PIN	LENGTH	REMARKS
AUDIO H4	H4-1	H7-1	GREEN	22	MALE		VOLUME
	H4-2	SPEAKER	GREEN	22	FEMALE		
	H4-3	H7-2	RED	22	"		VOLUME
	H4-4	H2-7			"		REF +25
	H4-4	H5-1	RED	22	"		
	H4-5	SPEAKER	BLACK	22	"		
	H4-6	H2-8			"		REF -25
	H4-7	H2-11			"		REF GND
	H4-8	H7-3	BLUE	22	"		VOLUME
	H4-9	H2-9			"		REF +5
COIN METER H5	H5-1	H4-4			MALE		REF
	H5-2						NOT USED
	H5-3	H6-3			MALE		REF
LOGIC H6	H6-1						NOT USED
	H6-2						NOT USED
	H6-3	H5-3	BROWN	22	FEMALE		METER
	H6-4	H2-12			MALE		REF GND
	H6-5	H3-12			FEMALE		REF GND
	H6-6						NOT USED
	H6-7						NOT USED
	H6-8						NOT USED
	H6-9						NOT USED
	H6-10	H2-10			FEMALE		REF +5
	H6-11						NOT USED
	H6-12						NOT USED
VOLUME H7	H7-1	H4-1			FEMALE		REF
	H7-2	H4-3			MALE		REF
	H7-3	H4-8			"		REF

NOTES: UNLESS OTHERWISE SPECIFIED

MATERIAL:	DRAWN BY: S. HURLBERT	DATE 4-80	CINEMATRONICS INC El Cajon Ca. 92020
	PROJECT ENGR:	DATE	DWG TITLE: MAIN HARNESS ASSY.
	RELEASE APPROV:	DATE	
FINISH:	DO NOT SCALE DWG		MODEL NO. / DWG SIZE C / DWG NO. CA1002000 / REV. A
	TOLERANCE: UNLESS OTHERWISE SPECIFIED		CODE IDENT / SHEET 2 OF 2
	PROJECTION:	SCALE: NONE	

8-20

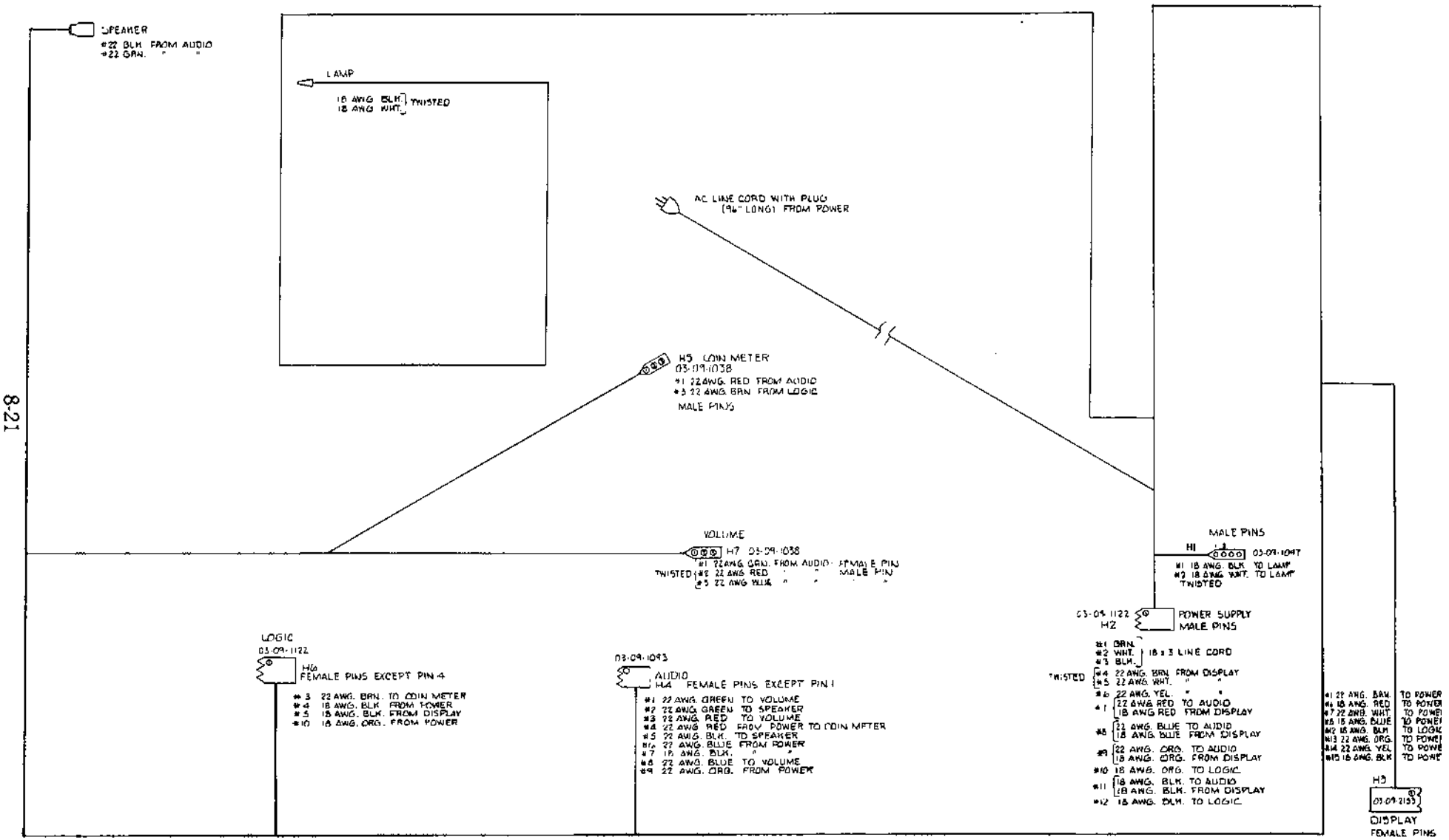
SPEAKER
#22 BLK. FROM AUDIO
#22 GRN. " "
LAMP
18 AWG BLK
18 AWG WHT.
TWISTED
AC LINE CORD WITH PLUG
(96" LONG) FROM POWER
H5 COIN METER
03-09-1038
#1 22AWG. RED FROM AUDIO
#3 22 AWG. GRN FROM LOGIC
MALE PINS
VOLUME
H7 03-09-1038
#1 22AWG GRN. FROM AUDIO - FEMALE PIN
TWISTED #2 22 AWG RED " " MALE PIN
#3 22 AWG YLW. " "
MALE PINS
H1 03-09-1097
#1 18 AWG. BLK. TO LAMP
#2 18 AWG WHT. TO LAMP
TWISTED
03-09-1122
H2 POWER SUPPLY
MALE PINS
#1 BRN.
#2 WHT. 18 x 3 LINE CORD
#3 BLK.
TWISTED #4 22 AWG. BRN FROM DISPLAY
#5 22 AWG. WHT. " "
#6 22 AWG. YEL. " "
#7 22 AWG RED TO AUDIO
18 AWG RED FROM DISPLAY
#8 22 AWG. BLUE TO AUDIO
18 AWG. BLUE FROM DISPLAY
#9 22 AWG. ORG. TO AUDIO
18 AWG. ORG. FROM DISPLAY
#10 18 AWG. ORG. TO LOGIC
#11 18 AWG. BLK. TO AUDIO
18 AWG. BLK. FROM DISPLAY
#12 18 AWG. BLK. TO LOGIC
LOGIC
03-09-1122
H6
FEMALE PINS EXCEPT PIN 4
#3 22 AWG. BRN. TO COIN METER
#4 18 AWG. BLK FROM POWER
#5 18 AWG. BLK. FROM DISPLAY
#10 18 AWG. ORG. FROM POWER
03-09-1093
AUDIO
H4 FEMALE PINS EXCEPT PIN 1
#1 22 AWG. GREEN TO VOLUME
#2 22 AWG. GREEN TO SPEAKER
#3 22 AWG. RED TO VOLUME
#4 22 AWG RED FROM POWER TO COIN METER
#5 22 AWG. BLK. TO SPEAKER
#6 22 AWG. BLUE FROM POWER
#7 18 AWG. BLK. " "
#8 22 AWG. BLUE TO VOLUME
#9 22 AWG. ORG. FROM POWER
#1 22 AWG. BRN. TO POWER
#6 18 AWG. RED TO POWER
#7 22 AWG. WHT. TO POWER
#8 18 AWG. BLUE TO POWER
#12 18 AWG. BLK TO LOGIC
#13 22 AWG. ORG. TO POWER
#14 22 AWG. YEL TO POWER
#15 18 AWG. BLK TO POWER
H3
03-09-2153
DISPLAY
FEMALE PINS

SUGGESTED PARTS FOR STOCK

It is recommended that the following list of parts be maintained in the event servicing of your game becomes necessary:

MONITOR

DAC-80	— digital to analog converter
LF13331	— high speed analog switch
TL081	— operational amplifier
*7818	— +18 volt regulator
*7918	— -18 volt regulator
7815	— +15 volt regulator
7915	— -15 volt regulator
2N5876	— PNP power transistor
2N5878	— NPN power transistor
7406	— inverter package

LOGIC

Masked ROMS	— particular to each game
D-ROMS (1-6)	— custom programmed
74LS32	— IC
74LS259	— Audio/Coin circuit IC

*Necessary only if monitor is not equipped with Keltron H.V. Module.