# STAR TREK™

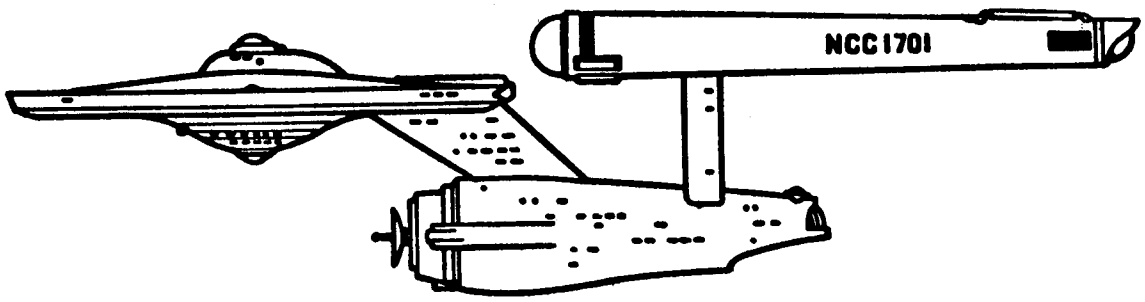


## Owner's Manual

**Manufactured By**

**SEGA®**

**TLX 910-335-1621**

**STAR TREK™ Owner's Manual**
**Copyright © 1983 by SEGA Electronics, Inc., All Rights Reserved**
**STAR TREK™ Indicates a Trademark of Paramount Pictures, Inc.**

TABLE OF CONTENTS


Introduction . . . . . 1
Game Set-Up and Inspection . . . . . 2
Specifications and Important Notes . . . . . 3
Game Concept . . . . . 4
Scoring . . . . . 6
Option Selection . . . . . 7
Self-Test . . . . . 10
G-80 Bus Detail . . . . . 14
G-80 Mother Board Bus Pin Assignments . . . . . 15
Troubleshooting Procedures . . . . . 29
Color X-Y Monitor and G-80 Circuit Description . . . . . 33
Color X-Y Monitor Block Diagram . . . . . 38
Circuit Description Illustrations . . . . . 49
Adjustments and Specifications . . . . . 50
Universal Sound Board Circuit Description . . . . . 53
STAR TREK™ Sounds . . . . . 54
Sound Block Assignments . . . . . 55
Parts Catalog . . . . . 56
Schematics . . . . . 130
- Cabinet Wiring Diagram . . . . . 130
- Sub-Assembly Wiring Diagram . . . . . 131
- Single Player Control Panel Interface . . . . . 132
- CPU Board . . . . . 133
- EPROM Board . . . . . 135
- X-Y Timing Board . . . . . 136
- X-Y Control Board . . . . . 139
- Speech Board . . . . . 141
- Universal Sound Board . . . . . 142
- G-80 Power Supply . . . . . 145
- Color X-Y Monitor . . . . . 146

# INTRODUCTION

STAR TREK™ is a microprocessor based coin-operated electronic game, that makes extensive use of digital integrated circuitry and television monitor concepts. This manual is designed for the use of the maintenance technician who possess a general working knowledge of solid-state circuitry and video monitor theory. Any individual NOT knowledgeable in these areas SHOULD NOT attempt repair of the electronic portions of the game.

In addition to this manual and training in electronics, troubleshooting and repair will be facilitated by: access to general electronic-type handtools, a multimeter, a 50 to 100 MHz oscilloscope and a logic probe would be helpful.

Technical assistance is available toll-free by calling:

1-800-854-1938 outside California

1-800-722-8576 inside California

Parts information assistance is available toll-free by calling:

1-800-854-1900 outside California

1-800-722-8575 inside California

Questions or comments concerning STAR TREK™ or any of our games are welcome and should be directed to:

Customer Service Manager
SEGA Electronics, Inc.
16250 Technology Drive
San Diego, California 92127-1985

## GAME SET-UP AND INSPECTION

### 1. Inspection

a) Before plugging in your new game, inspect it closely to spot any possible shipping damage. Check to ensure the graphics are in place, the monitor is not damaged and that the overall cabinet is in good condition.

b) Open the rear service door and inspect the inside of the game electronics compartment. Be sure no components or connectors have come loose. Proper connector fittings must be checked before game power is applied. Check all related connectors for good contact. Although disconnected connectors are easily spotted, poor contacts are difficult to locate. The connectors should therefore be pushed in firmly and then loosened to spot poor connections.

c) Check to ensure the fuses are intact. There are five fuses (not counting the monitor fuses). One fuse is located on the AC Junction Box. The other four are on the power supply PC board.

### 2. Voltage Selection

Before plugging in your game, make sure that the game voltage is correct for your location. Locate the two leads from the AC Junction Box to the power transformer. For 110 VAC, they should be connected to terminals 1 and 3 on the power transformer. For 100 VAC, connect 1 and 2, and for 220 VAC applications, they should be connected to 1 and 4. You will also notice on the AC junction box that there is a safety interlock switch. When the front panel is in place the switch is depressed and the game receives power. Removing the front panel, the switch returns to its original position and the power is cut off from the game. For servicing, this switch can be pulled out and power will be restored.

### 3. Game Specifications

Power 100 VAC, 60 Hz (nominal), 150 watts maximum

3. Game Specifications (Cont)

Power 110 VAC, 60 Hz (nominal), 150 watts maximum
220 VAC, 60 Hz (nominal), 150 watts maximum

4. Important Notes

a) The following note is included in compliance with FCC rules:
WARNING: This equipment generates and uses radio frequency energy and if not installed and used properly, i.e., in strict accordance with the instruction manual, may cause harmful interference to radio communications. It has been tested and found to comply with the limits for a Class A computing device pursuant to Subpart J of Part 15 of FCC rules, which are designed to provide reasonable protection against such interference when operated in a commercial environment.

Operation of this equipment in a residential area is likely to cause interference in which case the user at his own expense will be required to take whatever measures may be required to correct the interference.

b) Miscellaneous

NEVER remove circuit board connections while power is on.

NEVER replace any components with anything other than exact replacement parts.

DO NOT replace fuses with anything other than proper value. A blown fuse indicates an overload condition withing the game. Replacing the fuse with a higher value can cause damage to internal components, if an overload occurs.

## GAME CONCEPT

STAR TREK™ is a one or two player SEGA Color X-Y video game with computerized speech synthesis. The player finds himself the Captain of the Starship Enterprise, his mission being to rid the universe of a number of threats to the United Federation of Planets.

STAR TREK™ has a unique method of displaying the information vital to the game play. This method involves the separation of the CRT into three completely separate "screens".

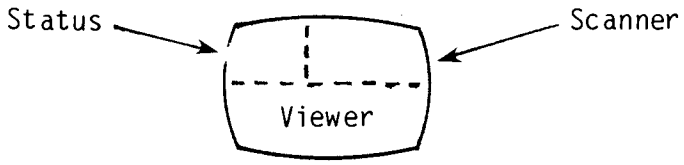


The "Scanner" is where the player sees a "top down" or plan view of local space, with the Enterprise always in the center of this screen. The "Viewer" is where the player sees actual "apparent 3-D" images, as if he were looking out the ships front window. The "Status" screen displays player score in addition to Shield strength, number of Photon Torpedoes, and amount of Warp energy remaining.

The game begins by introducing Klingons, Starbases and the Enterprise into the Scanner with an exciting "shrink down" animation sequence. The Enterprise starts with one to four Shields and Photon Torpedoes (switch selectable). By actuating the rotary knob and depressing the Thrust button the player may maneuver about the Scanner screen.

In order to destroy enemies the player may use either of two weapons; Phasers (the Fire button) or Photon Torpedoes. Each has unique properties.

* Phasers are instantaneous, can destroy only one enemy at a time, and are in unlimited energy supply.
* Photon Torpedoes require time to travel, can destroy many enemies, and are in LIMITED supply. Displayed in the Status screen, Photon Torpedo supply appears as a red bar (squares).

For high speed the player may depress the WARP button. While this button is held down the Enterprise moves very quickly and cannot be damaged in any way by anything. A blue bar in the Status screen displays the amount of Warp energy available and shrinks as the Warp button is held down.

The Enterprise is shrouded by an automatic Shield, which protects the Enterprise from enemy fire and collisions. The Shields are displayed in the Status screen as green line segments (a bar). Once the strength of the Shields is depleted, the ship can sustain damage. When damaged, the Enterprise looses ship functions in the following order: Shields, Photon Torpedoes, Warp Drive. If all of these are damaged, the next hit will destroy the Enterprise and end the game.

In order to repair this damage the player may choose to dock with a Starbase. Docking is accomplished by merely flying into a Starbase. The "DOCKED" message appears, all damage is repaired, and a Shield unit, Photon Torpedo, and some Warp time are added to the ships supplies. Although only four of each supply unit is displayed at any one time, 255 can be collected.

The primary enemy is the Klingon Battle Cruiser, which comes in three colors:

* Red Klingon - ignores the Enterprise and sets out to destroy a Starbase, after which the Klingon turns purple.
* Purple Klingon - ignores Starbases and attempts to destroy the Enterprise by firing plasma energy balls. Purple Klingons will stop a certain distance away while attacking so as not to risk collision. After a certain period of time (depending on round), purple Klingons turn white.
* White Klingons - sometimes known as "Maniac Klingons", these Klingons will move VERY QUICKLY and attempt to ram the Enterprise.

Anti-Matter Saucers appear randomly and move about the screen in a "confusing" fashion. These saucers can be destroyed only with Phasers. If the saucer collides with the Enterprise, it will attach itself, drain your ships Warp energy, then leave quickly.

After a number of rounds, the player advances to the Nomad round. In this sequence Nomad zips about the screen depositing dangerous mines. The mines

cause chain reactions which should be avoided. Nomad can only be destroyed with Phasers. Once Nomad has delivered its total load of 30 mines, it waits for the last mine to detonate, leaves the screen and ends the round.

Every 10,000 to 40,000 points (operator selectable) the player is awarded a bonus Shield unit, Photon Torpedo and Warp time unit. The two player game is played with players alternating with each complete round. Whenever a player is eliminated, the other player continues and finishes the game.

## SCORING

Points are awarded for destroying enemies and for the "Starbase Bonus".

* Enemies
  - Klingons . . . . . 25 + (round number X 25) Points
  - Anti-Matter Saucer . . . . . 5,000 Points
  - Nomad . . . . . 30,000 Points
* Starbase Bonus - at the end of a round
  - Used Starbase . . . . . (round number X 250) Points
  - Un-used Starbase . . . . . (round number X 1,000) Points

## OPTION SELECTION

| OPTION | SWITCH #1 | 1 | 2 | 3 | 4 | 5 | 6 | 7 | 8 |
|---|---|---|---|---|---|---|---|---|---|
| VOICE DURING ADVERTISING | | X | X | X | X | X | X | C | X |
| NO VOICE DURING ADVERTISING | | X | X | X | X | X | X | O | X |
| PHOTON TORPEDOES: | 1 | X | X | X | X | C | C | X | X |
| | 2 | X | X | X | X | C | O | X | X |
| | 3 | X | X | X | X | O | C | X | X |
| | 4 | X | X | X | X | O | O | X | X |
| DIFFICULTY: | EASY | X | X | C | C | X | X | X | X |
| | MEDIUM | X | X | C | O | X | X | X | X |
| | HARD | X | X | O | C | X | X | X | X |
| | TOURNAMENT | X | X | O | O | X | X | X | X |
| BONUS | 10,000 pts | C | C | X | X | X | X | X | X |
| | 20,000 pts | C | O | X | X | X | X | X | X |
| | 30,000 pts | O | C | X | X | X | X | X | X |
| | 40,000 pts | O | O | X | X | X | X | X | X |

| OPTION | SWITCH #2 | 1 | 2 | 3 | 4 | 5 | 6 | 7 | 8 |
|---|---|---|---|---|---|---|---|---|---|
| 4 COIN/1 CREDIT | | C | C | C | C | C | C | C | C |
| 3 COIN/1 CREDIT | | C | C | C | O | C | C | C | O |
| 2 COIN/1 CREDIT | | C | C | O | C | C | C | O | C |
| 1 COIN/1 CREDIT | | C | C | O | O | C | C | O | O |
| 1 COIN/2 CREDIT | | C | O | C | C | C | O | C | C |
| 1 COIN/3 CREDIT | | C | O | C | O | C | O | C | O |
| 1 COIN/4 CREDIT | | C | O | O | C | C | O | O | C |
| 1 COIN/5 CREDIT | | C | O | O | O | C | O | O | O |

OPTION SWITCH SETTINGS - (cont.)

| OPTION | SWITCH #2 | | | | | | | |
|---|---|---|---|---|---|---|---|---|
| | 1 | 2 | 3 | 4 | 5 | 6 | 7 | 8 |
| 1 COIN/6 CREDIT | O | C | C | C | O | C | C | C |
| 2 COIN/1 CREDIT | O | C | C | O | O | C | C | O |
| 4 COIN/2 CREDIT<br>5 COIN/3 CREDIT | | | | | | | | |
| 2 COIN/1 CREDIT<br>4 COIN/3 CREDIT | O | C | O | C | O | C | O | C |
| 1 COIN/1 CREDIT<br>2 COIN/2 CREDIT<br>3 COIN/3 CREDIT | O | C | O | O | O | C | O | O |
| 4 COIN/4 CREDIT<br>5 COIN/6 CREDIT | O | C | O | O | O | C | O | O |
| 1 COIN/1 CREDIT<br>2 COIN/2 CREDIT<br>3 COIN/3 CREDIT<br>4 COIN/5 CREDIT | O | O | C | C | O | O | C | C |
| 1 COIN/1 CREDIT<br>2 COIN/3 CREDIT | O | O | C | O | O | O | C | O |
| 1 COIN/2 CREDIT<br>2 COIN/4 CREDIT<br>3 COIN/6 CREDIT<br>4 COIN/8 CREDIT<br>5 COIN/11 CREDIT | O | O | O | C | O | O | O | C |

## OPTION SWITCH SETTINGS - (cont.)

| OPTION | SWITCH #2 | | | | | | | |
|---|---|---|---|---|---|---|---|---|
| | 1 | 2 | 3 | 4 | 5 | 6 | 7 | 8 |
| 1 COIN/2 CREDIT | 0 | 0 | 0 | 0 | 0 | 0 | 0 | 0 |
| 2 COIN/4 CREDIT | | | | | | | | |
| 3 COIN/6 CREDIT | | | | | | | | |
| 4 COIN/9 CREDIT | | | | | | | | |

X = NOT USED  0 = OPEN  C = CLOSED

## SELF-TEST

The G-80 system contains a built-in self-test system, activated by depressing the red self-test switch located on the CPU Board. If the cover to the G-80 card cage is in place, the switch can be activated by putting a pen or pencil through the hole provided on the cover.

Basic diagnostics test sequence:

1. CPU RAM
2. Maskable interrupts
3. First 1K of game ROMs
4. Video RAM and Hardware multiplier
5. Player start buttons
6. Display screen (visual)
7. All game ROMs
8. System inputs
9. Game controls
10. Sounds/Voice

Individualized diagnostics descriptions and procedures:

1. CPU RAM - tests all RAM on CPU card before proceeding, system needs to use this RAM for stack and variables during other tests so if any locations are bad processor will half (halt light will come on).

2. Maskable interrupts - video interrupt is enabled through output port bit and all maskable interrupts are enabled inside processor, CPU then executes several HALT instructions to insure that at least one edge triggered interrupt has occured. If no interrupts occur during this test the halt light will remain on constantly. This is the same result as a bad CPU RAM. This ambiguity can be eliminated by checking the vertical interrupt another way. The system reset/power-up logic will also halt if the video interrupt is not functioning, to try this press the RESET switch.

3. First 1K of game ROMs - the first 1K of the first game ROM will be checked for validity. If this portion of the first ROM is bad the system will not be able to proceed because vital information defining parameters of the game are stored in this first 1K. If an error occurs during this validity check, the CPU will lock up and repeatedly flash the halt light.

4. Video RAM and Hardware multiplier - the video RAM is tested first and in the event that it tests good then the hardware multiplier is checked. If the video RAM is good, the message "ALL VIDEO RAM GOOD, MULTIPLIER GOOD" appears. If a bad video RAM chip is found, then the message "BAD VIDEO RAM, CHIP U##" appears on the screen along with that chip's location. Due to the fact that sometimes a bad video chip causes the display to be erratic, the system also flashes out the bad chip's location on the halt light, over and over again separating the U#s with a one second on pulse.

The hardware multiplier is used in the game to multiply two 8 bit numbers together to form one 16 bit product. This test performs a select group of multiplications, over 2,000 multiplications in actuality, designed to thoroughly exercise the process of multiplication between the software and the hardware multiplier. The messages "GOOD" or "BAD" are the only indication of functionality with respect to this test.

5. Player start buttons - one of the two "game start" push buttons on the front of the cabinet is very special. The "one player start" button was designated by the system as a way to terminate the test that is currently being run. The reason that these two buttons were tested relatively early in the sequence, was so that the remaining tests could use the "one player start"

button for a termination signal. To be sure that these two buttons are functioning properly, see that when untouched the status indicated is "O" (for open switch contact) and that when pushed or depressed momentarily the indicated status is "C" (for closed switch contact) during the time the button is down. This notation for switches being in the open or closed state, "O" or "C", will be used throughout the diagnostic sequence whenever the status of a switch is being displayed on the screen.

6. Screen - this test is supplied by the game logic, external to the CPU ROM, to provide a visual indication of how well the display screen is functioning. It tests beam deflection and colors to check that all electron guns are functioning. In the display, you should see some sort of test showing the colors white, red, green and blue.

7. All game ROMs - the intent of this test was to insure the integrity of all of the data in all of the game ROMs. At the time the ROMs for a game were originally generated there was an algorithm performed on each 1K block of data. Each of these calculations, a form of CRC (cyclic redundancy check, similar to a checksum), produced one 16-bit word. These words are stored, along with a Gremlin part number, in the first ROM. When this test is run, all of these 16-bit CRC words are regenerated and are compared to the known values stored in the table in the first ROM. If one of these newly calculated values does not match its corresponding stored value, then the system kicks out an error which amounts to the message "BAD ROM" followed by one or more bad part numbers of that ROM that was found in mis-match. If all ROMs are good the screen displays: "ALL ROMS GOOD". Then the system quickly proceeds on to the next test.

8. System inputs - these inputs are referred to as 'system inputs', simply because they control system functions, such as credit accumulation, coinage options, game configuration, etc. The diagnostic user may check to see that the coin switches, service switch, and option dip switches are functioning properly. The open and closed switch notation applies here as described earlier.

9. Game controls - the names of the controls that the game player would use to control the action on the screen is what this test was designed to check. Make sure that when hands are off of the controls all of the switches are open. When a particular control is twisted, pushed, turned or in whatever way activated, watch to see that the status of that control, and only that particular control, changes to reflect the action on the control panel. The screen should display from open to closed.

10. Sounds/Voice - just sit back, listen and watch this one. All of the sounds made by the game will be produced and their respective names will appear in the center of the screen. The termination button acts sluggish during this test due to the fact that some of the sounds must be created by subroutines external to the CPU ROM. After completion of this test, the system will return to the advertising mode.

# G-80 BUS DETAIL

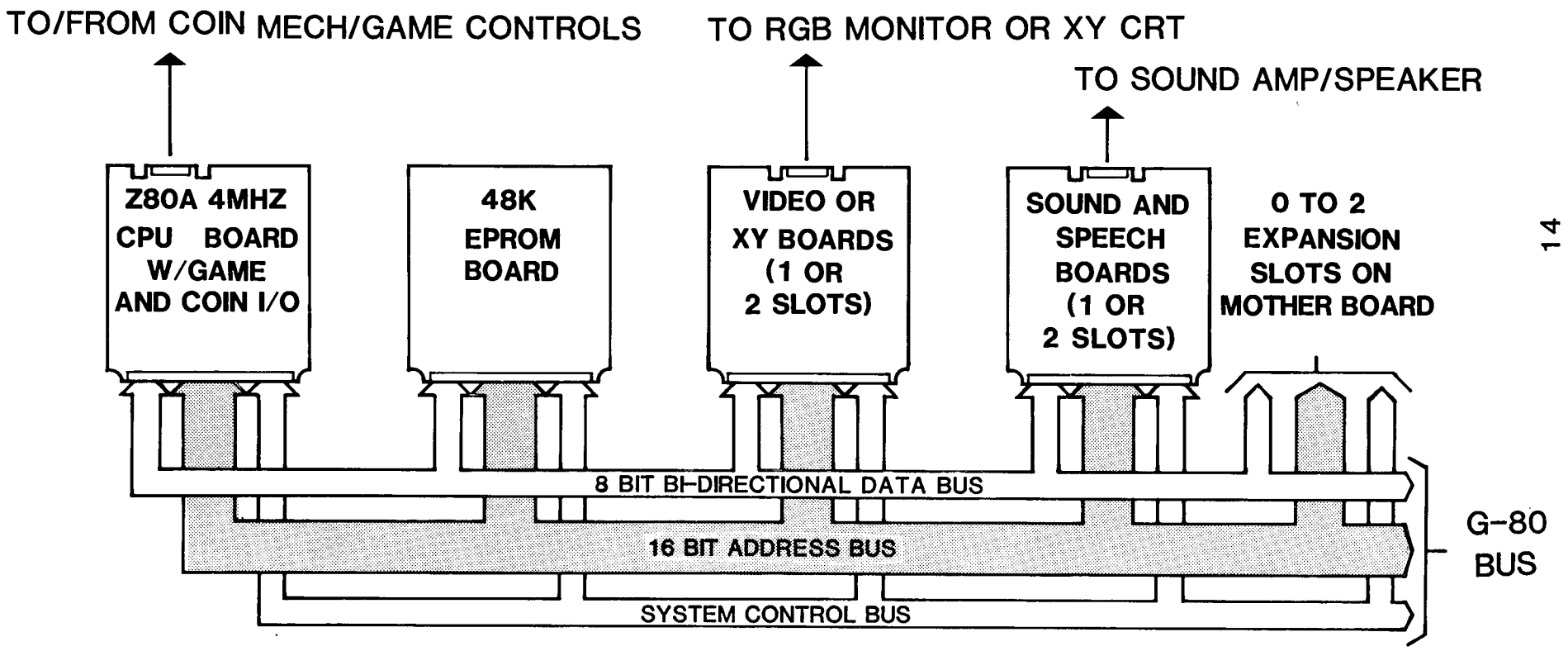

## G-80 MOTHER BOARD BUS PIN ASSIGNMENTS

| | | | |
|---|---|---|---|
| 1 | GROUND | GROUND | A |
| 2 | A15 | A7 | B |
| 3 | A14 | A6 | C |
| 4 | A13 | A5 | D |
| 5 | A12 | A4 | E |
| 6 | A11 | A3 | F |
| 7 | A10 | A2 | H |
| 8 | A9 | A1 | J |
| 9 | A8 | AØ | K |
| 10 | D7 | D3 | L |
| 11 | D6 | D2 | M |
| 12 | D5 | D1 | N |
| 13 | D4 | DØ | P |
| 14 | $\overline{\text{WAIT}}$ | $\overline{\text{RESET}}$ | R |
| 15 | $\overline{\text{INT}}$ | $\overline{\text{EDGINT}}$ | S |
| 16 | $\overline{\text{NMI}}$ | $\overline{\text{EXT}\,\Phi}$ | T |
| 17 | $\overline{\text{EXT}\,\Phi\,\text{SEL}}$ | $\overline{\Phi\,\text{OUT}}$ | U |
| 18 | $\overline{\text{MEMR}}$ | $\overline{\text{MEMW}}$ | V |
| 19 | $\overline{\text{INPUT}}$ | $\overline{\text{OUTPUT}}$ | W |
| 20 | $\overline{\text{RFSH}}$ | $\overline{\text{MREQ}}$ | X |
| 21 | $\overline{\text{INTACK}}$ | $\overline{\text{AC}}$ | Y |
| 22 | +5V | +5V | Z |
| 23 | +5V | +5V | a |
| 24 | -5V | -5V | b |
| 25 | +12V | +12V | c |

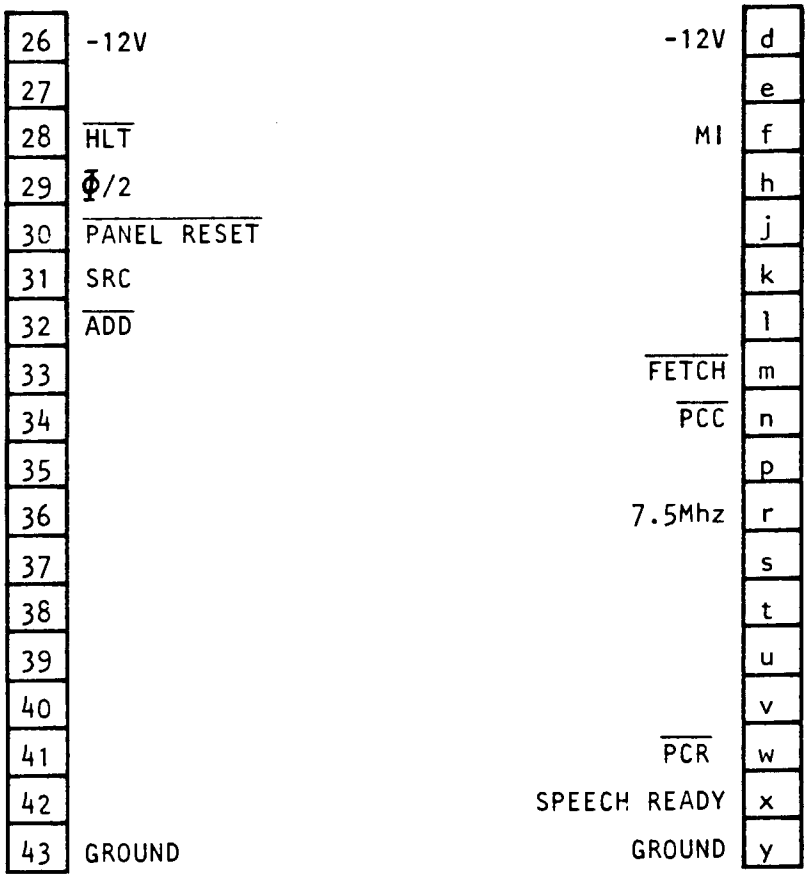
26 -12V
27
28 $\overline{\text{HLT}}$
29 $\overline{\Phi}/2$
30 $\overline{\text{PANEL RESET}}$
31 SRC
32 $\overline{\text{ADD}}$
33
34
35
36
37
38
39
40
41
42
43 GROUND
-12V d
e
MI f
h
j
k
l
$\overline{\text{FETCH}}$ m
$\overline{\text{PCC}}$ n
p
7.5Mhz r
s
t
u
v
$\overline{\text{PCR}}$ w
SPEECH READY x
GROUND y

## G-80 MOTHER BOARD BUS PIN ASSIGNMENTS

### CPU BOARD

| | | | |
|---|---|---|---|
| 1 | GROUND U38 | U36 GROUND | A |
| 2 | A15 U38 | U36 A7 | B |
| 3 | A14 U38 | U36 A6 | C |
| 4 | A13 U38 | U36 A5 | D |
| 5 | A12 U38 | U36 A4 | E |
| 6 | A11 U38 | U36 A3 | F |
| 7 | A10 U38 | U36 A2 | H |
| 8 | A9 U38 | U36 A1 | J |
| 9 | A8 U38 | U36 AØ | K |
| 10 | D7 U35 | U35 D3 | L |
| 11 | D6 U35 | U35 D2 | M |
| 12 | D5 U35 | U35 D1 | N |
| 13 | D4 U35 | U35 DØ | P |
| 14 | $\overline{\text{WAIT}}$ U31 | U30 $\overline{\text{RESET}}$ | R |
| 15 | $\overline{\text{INT}}$ U31 | U31 $\overline{\text{EDGINT}}$ | S |
| 16 | $\overline{\text{NMI}}$ U31 | U19 $\overline{\text{EXT}\,\Phi}$ | T |
| 17 | $\overline{\text{EXT}\,\Phi\,\text{SEL}}$ U18, U19 | U34 $\overline{\Phi\,\text{OUT}}$ | U |
| 18 | $\overline{\text{MEMR}}$ U34 | U34 $\overline{\text{MEMW}}$ | V |
| 19 | $\overline{\text{INPUT}}$ U34 | U34 $\overline{\text{OUTPUT}}$ | W |
| 20 | $\overline{\text{RFSH}}$ U34 | U34 $\overline{\text{MREQ}}$ | X |
| 21 | $\overline{\text{INTACK}}$ U34 | $\overline{\text{AC}}$ | Y |
| 22 | +5V | +5V | Z |
| 23 | +5V | +5V | a |
| 24 | -5V | -5V | b |
| 25 | +12V | +12V | c |

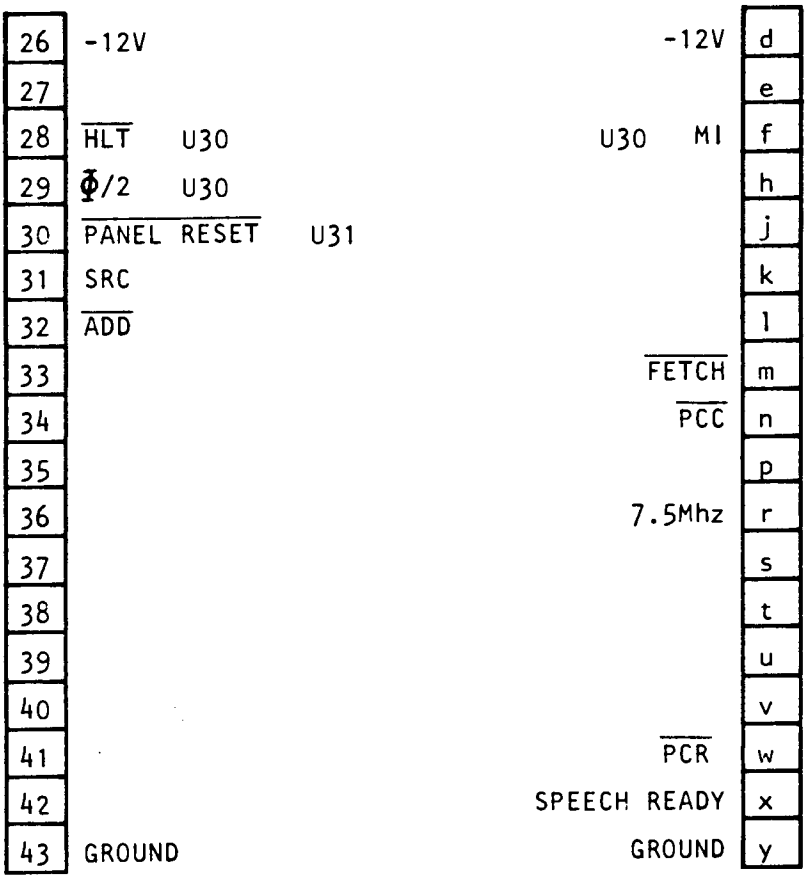
26 -12V
27
28 HLT U30
29 Φ/2 U30
30 PANEL RESET U31
31 SRC
32 ADD
33
34
35
36
37
38
39
40
41
42
43 GROUND
-12V d
e
U30 MI f
h
j
k
l
FETCH m
PCC n
p
7.5Mhz r
s
t
u
v
PCR w
SPEECH READY x
GROUND y

## G-80 MOTHER BOARD BUS PIN ASSIGNMENTS

### EPROM BOARD

| | | | | | |
|---|---|---|---|---|---|
| 1 | GROUND | | GROUND | | A |
| 2 | A15 | U29 | U28 | A7 | B |
| 3 | A14 | U29 | U28 | A6 | C |
| 4 | A13 | U24, U30 | U28 | A5 | D |
| 5 | A12 | U24, U30 | U28 | A4 | E |
| 6 | A11 | U24, U30 | U27 | A3 | F |
| 7 | A10 | U26 | U27 | A2 | H |
| 8 | A9 | U26 | U27 | A1 | J |
| 9 | A8 | U26 | U27 | AØ | K |
| 10 | D7 | U25 | U25 | D3 | L |
| 11 | D6 | U25 | U25 | D2 | M |
| 12 | D5 | U25 | U25 | D1 | N |
| 13 | D4 | U25 | U25 | DØ | P |
| 14 | $\overline{\text{WAIT}}$ | | $\overline{\text{RESET}}$ | | R |
| 15 | $\overline{\text{INT}}$ | | $\overline{\text{EDGINT}}$ | | S |
| 16 | $\overline{\text{NMI}}$ | | $\overline{\text{EXT}\,\Phi}$ | | T |
| 17 | $\overline{\text{EXT}\,\Phi\,\text{SEL}}$ | | $\overline{\Phi\,\text{OUT}}$ | | U |
| 18 | $\overline{\text{MEMR}}$ | U26 | $\overline{\text{MEMW}}$ | | V |
| 19 | $\overline{\text{INPUT}}$ | | $\overline{\text{OUTPUT}}$ | | W |
| 20 | $\overline{\text{RFSH}}$ | | $\overline{\text{MREQ}}$ | | X |
| 21 | $\overline{\text{INTACK}}$ | | $\overline{\text{AC}}$ | | Y |
| 22 | +5V | | +5V | | Z |
| 23 | +5V | | +5V | | a |
| 24 | -5V | | -5V | | b |
| 25 | +12V | | +12V | | c |

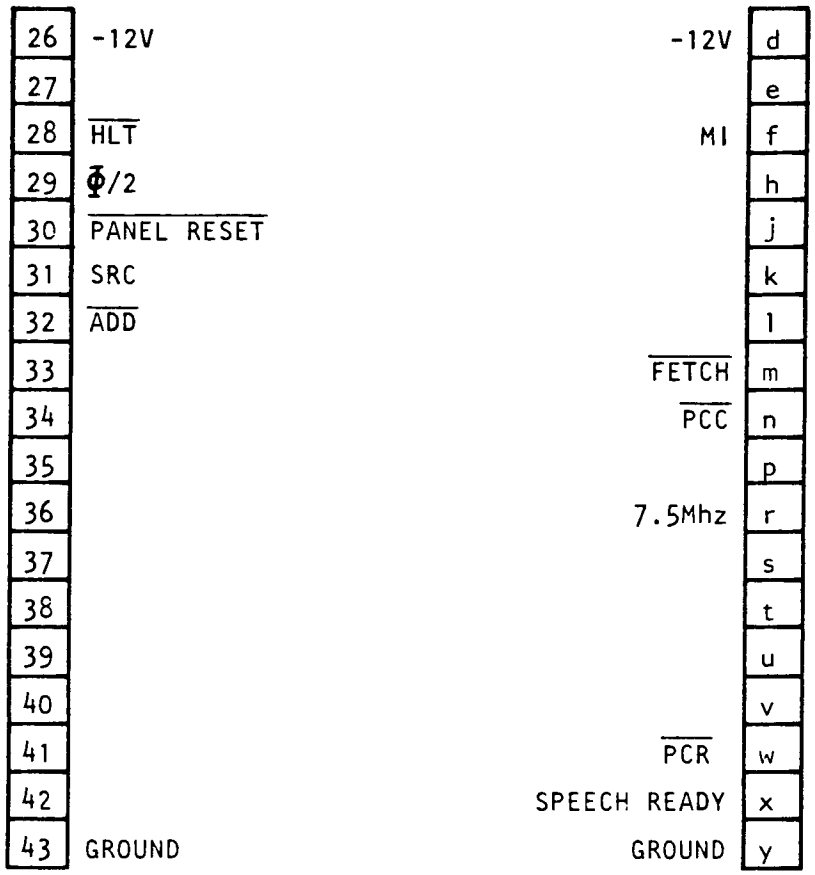
26 -12V
27
28 $\overline{\text{HLT}}$
29 $\overline{\Phi}$/2
30 $\overline{\text{PANEL RESET}}$
31 SRC
32 $\overline{\text{ADD}}$
33
34
35
36
37
38
39
40
41
42
43 GROUND
-12V d
e
MI f
h
j
k
l
$\overline{\text{FETCH}}$ m
$\overline{\text{PCC}}$ n
p
7.5Mhz r
s
t
u
v
$\overline{\text{PCR}}$ w
SPEECH READY x
GROUND y

## G-80 MOTHER BOARD BUS PIN ASSIGNMENTS

UNIVERSAL SOUND BOARD

| | | | | | |
|---|---|---|---|---|---|
| 1 | GROUND | | | GROUND | A |
| 2 | A15 | U37, U40 | U48, U57, U59 | A7 | B |
| 3 | A14 | U37, U40 | U48, U57, U59 | A6 | C |
| 4 | A13 | U37, U40, U48 | U57, U59 | A5 | D |
| 5 | A12 | U37, U40 | U57, U59 | A4 | E |
| 6 | A11 | U58 | U56, U59 | A3 | F |
| 7 | A10 | U58 | U56, U59 | A2 | H |
| 8 | A9 | U58 | U56, U59 | A1 | J |
| 9 | A8 | U58 | U56, U59 | AØ | K |
| 10 | D7 | U52, U54, U55 | U52, U54, U55 | D3 | L |
| 11 | D6 | U52, U54, U55 | U52, U54, U55 | D2 | M |
| 12 | D5 | U52, U54, U55 | U52, U54, U55 | D1 | N |
| 13 | D4 | U52, U54, U55 | U52, U54, U55 | DØ | P |
| 14 | $\overline{\text{WAIT}}$ | | U39, U48 | $\overline{\text{RESET}}$ | R |
| 15 | $\overline{\text{INT}}$ | | | $\overline{\text{EDGINT}}$ | S |
| 16 | $\overline{\text{NMI}}$ | | | $\overline{\text{EXT}\,\Phi}$ | T |
| 17 | $\overline{\text{EXT}\,\Phi\,\text{SEL}}$ | | | $\overline{\Phi\,\text{OUT}}$ | U |
| 18 | $\overline{\text{MEMR}}$ | U37 | U37 | $\overline{\text{MEMW}}$ | V |
| 19 | $\overline{\text{INPUT}}$ | U37 | U37 | $\overline{\text{OUTPUT}}$ | W |
| 20 | $\overline{\text{RFSH}}$ | | | $\overline{\text{MREQ}}$ | X |
| 21 | $\overline{\text{INTACK}}$ | | | $\overline{\text{AC}}$ | Y |
| 22 | +5V | | | +5V | Z |
| 23 | +5V | | | +5V | a |
| 24 | -5V | | | -5V | b |
| 25 | +12V | | | +12V | c |

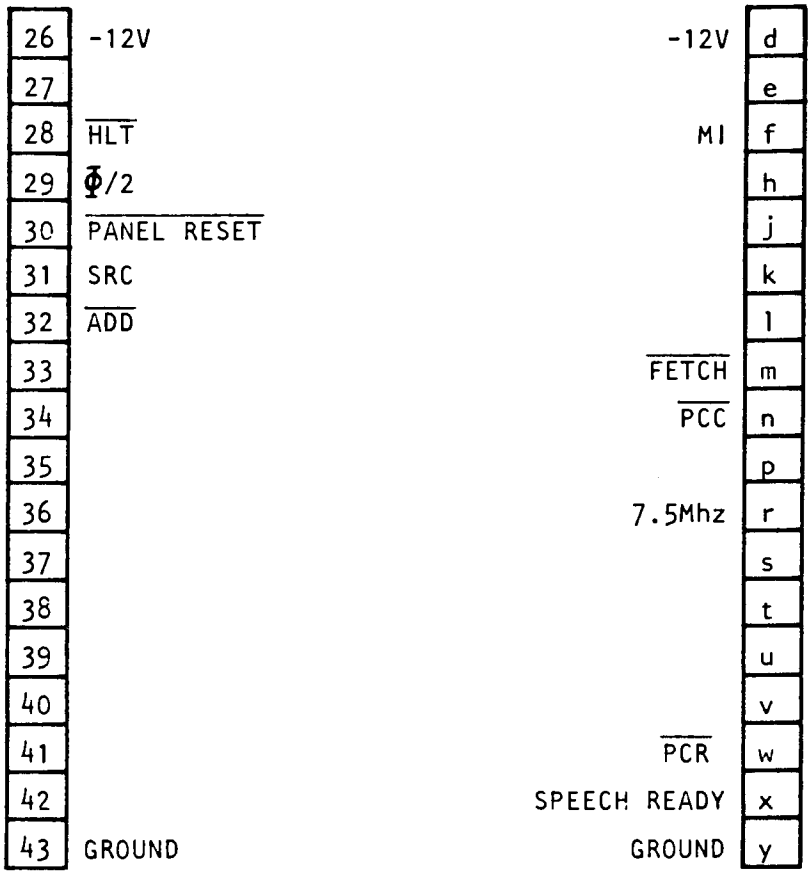
26 -12V
27
28 $\overline{\text{HLT}}$
29 $\Phi/2$
30 $\overline{\text{PANEL RESET}}$
31 SRC
32 $\overline{\text{ADD}}$
33
34
35
36
37
38
39
40
41
42
43 GROUND
-12V d
e
MI f
h
j
k
l
$\overline{\text{FETCH}}$ m
$\overline{\text{PCC}}$ n
p
7.5Mhz r
s
t
u
v
$\overline{\text{PCR}}$ w
SPEECH READY x
GROUND y

## G-80 MOTHER BOARD BUS PIN ASSIGNMENTS

### SPEECH BOARD

| | | | | |
|---|---|---|---|---|
| 1 | GROUND | | GROUND | A |
| 2 | A15 | | U38 A7 | B |
| 3 | A14 | | U38 A6 | C |
| 4 | A13 | | U37 A5 | D |
| 5 | A12 | | U37 A4 | E |
| 6 | A11 | | U37 A3 | F |
| 7 | A10 | | U30 A2 | H |
| 8 | A9 | | U24, U30 A1 | J |
| 9 | A8 | | U24, U30 AØ | K |
| 10 | D7 U21, U24, U27 | | U20, U21, U24 D3 | L |
| 11 | D6 U21, U24 | | U20, U21, U24 D2 | M |
| 12 | D5 U20, U21, U24 | | U20, U21, U24 D1 | N |
| 13 | D4 U20, U21, U24 | | U20, U21, U24 DØ | P |
| 14 | $\overline{\text{WAIT}}$ | | U18, U20, U21 $\overline{\text{RESET}}$ | R |
| 15 | $\overline{\text{INT}}$ | | $\overline{\text{EDGINT}}$ | S |
| 16 | $\overline{\text{NMI}}$ | | $\overline{\text{EXT}\,\Phi}$ | T |
| 17 | $\overline{\text{EXT}\,\Phi\,\text{SEL}}$ | | $\overline{\Phi\,\text{OUT}}$ | U |
| 18 | $\overline{\text{MEMR}}$ | | $\overline{\text{MEMW}}$ | V |
| 19 | $\overline{\text{INPUT}}$ U35, U36 | | U35, U36 $\overline{\text{OUTPUT}}$ | W |
| 20 | $\overline{\text{RFSH}}$ | | $\overline{\text{MREQ}}$ | X |
| 21 | $\overline{\text{INTACK}}$ | | $\overline{\text{AC}}$ | Y |
| 22 | +5V | | +5V | Z |
| 23 | +5V | | +5V | a |
| 24 | -5V | | -5V | b |
| 25 | +12V | | +12V | c |

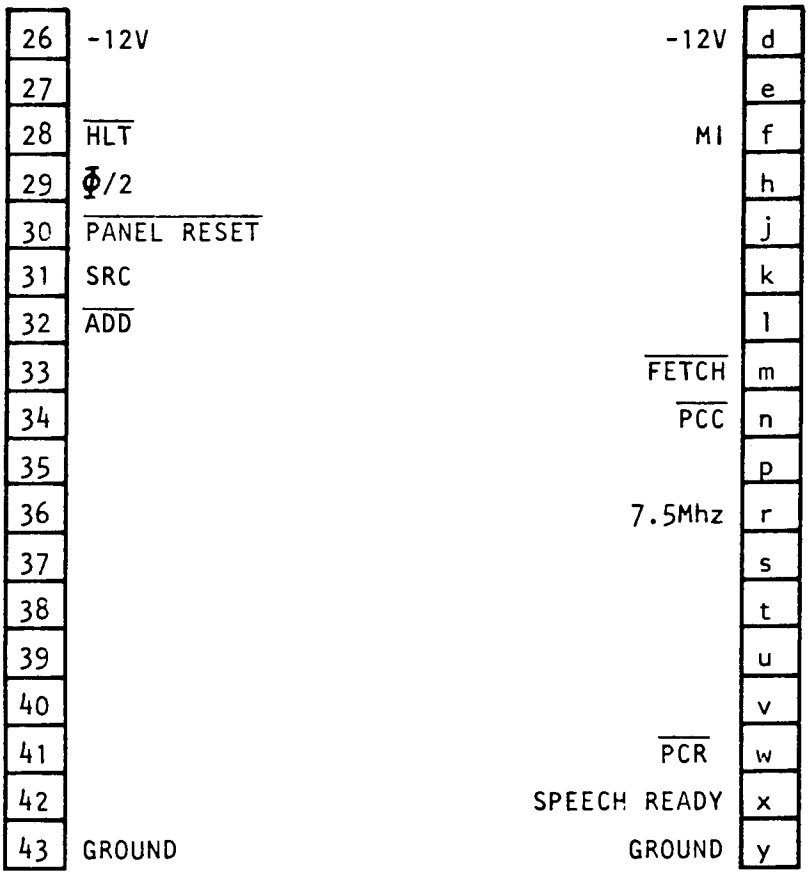
26 -12V
27
28 $\overline{\text{HLT}}$
29 $\Phi/2$
30 $\overline{\text{PANEL RESET}}$
31 SRC
32 $\overline{\text{ADD}}$
33
34
35
36
37
38
39
40
41
42
43 GROUND
-12V d
e
MI f
h
j
k
l
$\overline{\text{FETCH}}$ m
$\overline{\text{PCC}}$ n
p
7.5Mhz r
s
t
u
v
$\overline{\text{PCR}}$ w
SPEECH READY x
GROUND y

## G-80 MOTHER BOARD BUS PIN ASSIGNMENTS

### X-Y TIMING BOARD

| | | | | |
|---|---|---|---|---|
| 1 | GROUND | | GROUND | A |
| 2 | A15 | | A7 | B |
| 3 | A14 | | A6 | C |
| 4 | A13 | | A5 | D |
| 5 | A12 | | A4 | E |
| 6 | A11 | | A3 | F |
| 7 | A10 | | A2 | H |
| 8 | A9 | | A1 | J |
| 9 | A8 | | AØ | K |
| 10 | D7 | | D3 | L |
| 11 | D6 | | D2 | M |
| 12 | D5 | | D1 | N |
| 13 | D4 | | DØ | P |
| 14 | $\overline{\text{WAIT}}$ | | $\overline{\text{RESET}}$ | R |
| 15 | $\overline{\text{INT}}$ | U40 | $\overline{\text{EDGINT}}$ | S |
| 16 | $\overline{\text{NMI}}$ | U30 | $\overline{\text{EXT}\,\Phi}$ | T |
| 17 | $\overline{\text{EXT}\,\Phi\,\text{SEL}}$ | | $\overline{\Phi\,\text{OUT}}$ | U |
| 18 | $\overline{\text{MEMR}}$ | | $\overline{\text{MEMW}}$ | V |
| 19 | $\overline{\text{INPUT}}$ | | $\overline{\text{OUTPUT}}$ | W |
| 20 | $\overline{\text{RFSH}}$ | | $\overline{\text{MREQ}}$ | X |
| 21 | $\overline{\text{INTACK}}$ | | $\overline{\text{AC}}$ | Y |
| 22 | +5V | | +5V | Z |
| 23 | +5V | | +5V | a |
| 24 | -5V | | -5V | b |
| 25 | +12V | | +12V | c |

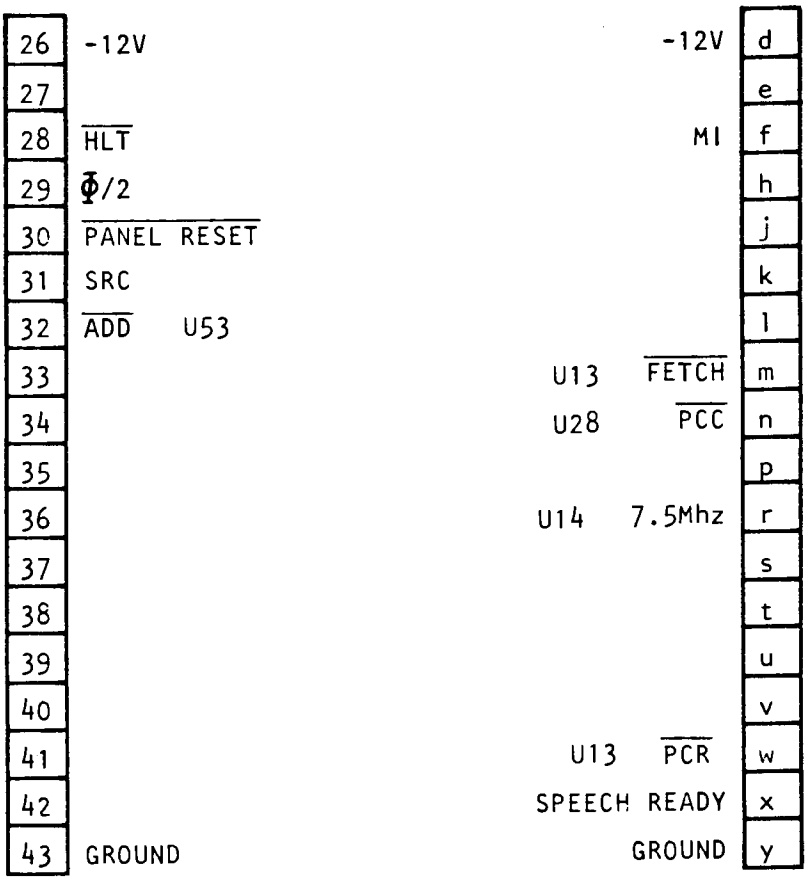
26 -12V
27
28 HLT
29 Φ/2
30 PANEL RESET
31 SRC
32 ADD U53
33
34
35
36
37
38
39
40
41
42
43 GROUND
-12V d
e
MI f
h
j
k
l
U13 FETCH m
U28 PCC n
p
U14 7.5Mhz r
s
t
u
v
U13 PCR w
SPEECH READY x
GROUND y

## G-80 MOTHER BOARD BUS PIN ASSIGNMENTS

### X-Y CONTROL BOARD

| | | | | | |
|---|---|---|---|---|---|
| 1 | GROUND | | | GROUND | A |
| 2 | A15 | U50 | U47, U48 | A7 | B |
| 3 | A14 | U50 | U42, U48 | A6 | C |
| 4 | A13 | U50 | U47, U48 | A5 | D |
| 5 | A12 | U42 | U47, U48 | A4 | E |
| 6 | A11 | U49 | U47, U48 | A3 | F |
| 7 | A10 | U49 | U47, U48 | A2 | H |
| 8 | A9 | U49 | U46, U48 | A1 | J |
| 9 | A8 | U49 | U46, U48 | AØ | K |
| 10 | D7 | U14, U44, U45 | U14, U43, U45 | D3 | L |
| 11 | D6 | U14, U44, U45 | U14, U43, U45 | D2 | M |
| 12 | D5 | U14, U44, U45 | U14, U43, U45 | D1 | N |
| 13 | D4 | U14, U44, U45 | U14, U43, U45 | DØ | P |
| 14 | $\overline{\text{WAIT}}$ | U39 | | $\overline{\text{RESET}}$ | R |
| 15 | $\overline{\text{INT}}$ | | | $\overline{\text{EDGINT}}$ | S |
| 16 | $\overline{\text{NMI}}$ | | | $\overline{\text{EXT}\,\Phi}$ | T |
| 17 | $\overline{\text{EXT}\,\Phi\,\text{SEL}}$ | | | $\overline{\Phi\,\text{OUT}}$ | U |
| 18 | $\overline{\text{MEMR}}$ | U38 | U42 | $\overline{\text{MEMW}}$ | V |
| 19 | $\overline{\text{INPUT}}$ | U37 | U37 | $\overline{\text{OUTPUT}}$ | W |
| 20 | $\overline{\text{RFSH}}$ | | | $\overline{\text{MREQ}}$ | X |
| 21 | $\overline{\text{INTACK}}$ | | | $\overline{\text{AC}}$ | Y |
| 22 | +5V | | | +5V | Z |
| 23 | +5V | | | +5V | a |
| 24 | -5V | | | -5V | b |
| 25 | +12V | | | +12V | c |

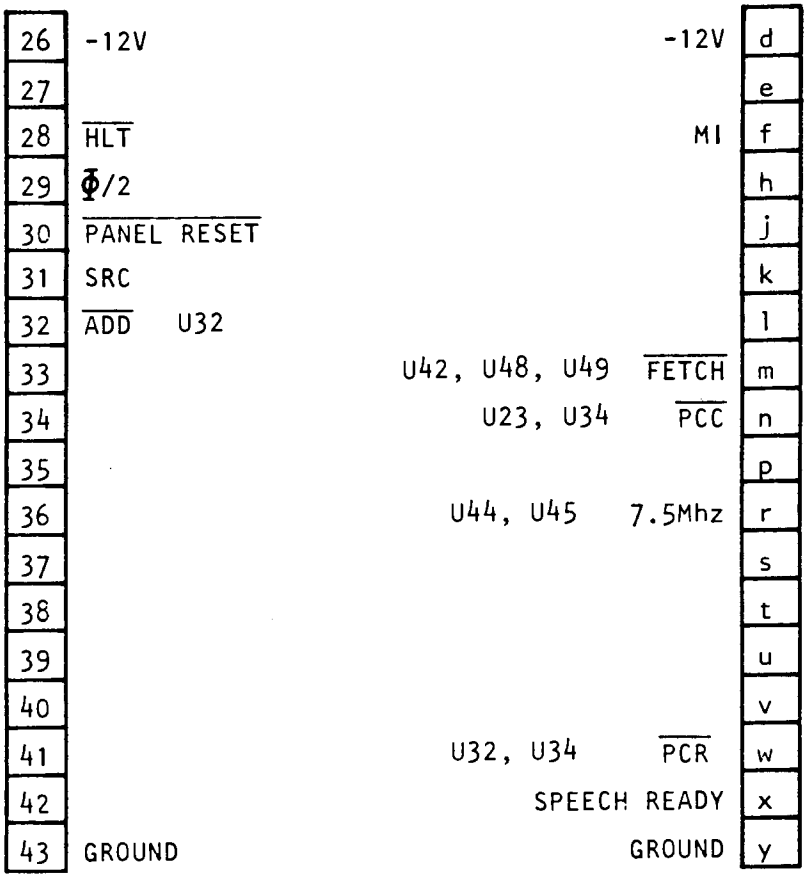
26 -12V
27
28 $\overline{HLT}$
29 $\Phi/2$
30 $\overline{PANEL\ RESET}$
31 SRC
32 $\overline{ADD}$ U32
33 U42, U48, U49 $\overline{FETCH}$
34 U23, U34 $\overline{PCC}$
35
36 U44, U45 7.5Mhz
37
38
39
40
41 U32, U34 $\overline{PCR}$
42 SPEECH READY
43 GROUND
-12V d
e
MI f
h
j
k
l
m
n
p
r
s
t
u
v
w
x
GROUND y

# STAR TREK™ TROUBLESHOOTING PROCEDURES

STAR TREK is a "state-of-the-art" electronic microprocessor based, video game. The result of hundreds of hours of work, design, research, experiment and more work. However, as with any electronic device, component failure or other problems can result in a game that doesn't function properly, or doesn't function at all. In either case, your game is "down", and so critically, are your profits.

Your objective is to fix it as quickly as possible, and logical troubleshooting goes a long way toward that repair. Although many troubleshooting methods may be familiar to you, procedural logic is common among them, and might be stated in this order: visual inspection, symptom recognition, symptom isolation, function isolation, component isolation and repair. Familiarity with the equipment in question will allow you to bypass one or more of these steps, as any particular problem may be obvious to you, or may have happened before. In general though, these 6 steps form a good premise upon which to approach your "down" game.

An extremely important item in our procedure is the first mentioned, giving the gear the "once over". A large percentage of failures found in electronics, show themselves visually and often a great deal of time can be saved by inspecting for burnt or blown components, loose or disconnected wiring or connectors, or PCB traces burnt or pulled up. Thorough visual inspections become increasingly important the closer you get to the faulty item, and should be repeated each time another portion of the game is eliminated. Symptom recognition (as with all electronic troubleshooting) in your game depends first, on knowing what a proper display is, and second, knowing how your display differs from a normal one. Symptom isolation follows naturally; (i.e., "I have no picture", "I have no sound", "I have no control over the car", "the picture is scrambled"), ergo, a video, audio, input or logic problem. Function isolation, such as a sync problem with the video, requires that you consider those functions that go to make up video sync. Is it a monitor problem, or an "on-the-board" problem? A monitor input check to verify the signal will tell you. Does the board have the voltage (from the power supply) that it needs? Yes? We must have a board failure, as we've just isolated down to function.

Taking our sync problem further, before we begin our search for an individual component, let's reapply that first item in our "Logical Troubleshooting Procedure". Look at the board. Open resistors, diodes, and capacitors often give themselves away.

Noticing a trace literally burned open can save you serious "down-time". The board looks OK, so on we go. Specific component isolation relates to the specific nature of the failure, component commonality, proper inputting (both signal and power) and proper outputting (as in the case of an output held high, low, or floating by input port failure in the succeeding state). More general problems (such as a total loss of video sync) requires the more involved procedure of systematic elimination of possibilities. This operation can be expedited however, by dividing the circuit in half, establishing a "go-no/go" at that point, and again dividing the suspect circuit portion in half. The largest possible areas can be eliminated in this manner, dividing and sub-dividing until the individual component failure is found.

As we've outlined previously, any electronic repair procedure consists of a series of efforts to isolate a problem down to a "managable" level; restating our Logical Troubleshooting Procedure in 6 steps, 1. Visual Inspection, 2. Symptom Recognition, 3. Symptom Isolation, 4. Function Isolation, 5. Component Isolation, and 6. Repair.

In our STAR TREK game system, we are dealing with, essentially, 3 major func- tional components:

1. The Power Supply
2. The G-80 Boards (Card Cage Module)
3. The Color X-Y Monitor

So, in a typical maintenance procedure, having isolated down to Function (Step 4.), we would next attempt to determine which of the 3 major elements is defective. In the following paragraphs, we will look at each element and some of its sub-divisions as a guide in isolating further.

Usually, the power supply can be eliminated as the source of a problem if the games comes up on the screen. The major exception is when the game plays normally but no sounds are produced. In this case, the power supply's amplifier circuit should be checked for audio signals from the sound and speech boards. If they are present on the amplifier output, then a bad speaker or connection is probably the cause of the problem. If the signals are not there, suspect the amplifier circuits on the sound and/or speech boards.

If the picture does not appear on the screen, check the power supply for the main AC voltage to the primary of its transformer; then ensure that the G-80 boards are supplied with the correct DC voltages from the power supply. Also make sure the 3 VAC reset signal is being applied to the CPU board. If all these tests prove normal, then eliminate the power supply as cause of the problem and proceed to check the remaining functional game components - G-80 boards and monitor.

In most cases, a simple test will help to isolate a problem of no picture to either the G-80 boards or monitor. On an oscilloscope, look for varying voltage signals on pins 1 and 4 of the 4-pin Molex connector on the Timing Board. If the signals look similar to those shown in Figure 1, check for signals swinging between 0 and +4 volts on the RGB outputs (4-pin Molex connector pins 4, 1, 2 respectively) on the Control Board. If all three outputs are at 0 volts, suspect the X-Y boards. If the signals appear normal, suspect the monitor as the cause of the problem. If however, pin 1 (to the monitors horizontal input) is held at or near +4 or -4 volts DC, suspect one or both X-Y boards. If pin 4 (to the vertical input) is held at or near +3 or -3 volts, suspect the other G-80 boards. In either case, TURN OFF THE POWER AND IMMEDIATELY DISCONNECT THE X-Y MONITOR. Proceed to check the inputs to D/A converters U1 and U4 (T5) for active signals. Verify that none of the Character Data lines (CD0-CD7) are pulled high or low, or are floating. Check for the XCL and YCL clock signals from U28 (T6). Verify that the 15 MHz crystal clock is operating and that a 40 Hz signal is present on pin-11 of U13 (T7). Check BOS signal to be sure it is not held; signal DRAW should be switching high and low. On the Control Board, observe the signal FETCH to ensure it pulses high and low. Also, none of the Data lines (D0-D7) should be held high, low, or floating (C5). Check for clock signals PCC and SCL (C5).

Look for input changes on U1 and U5 of the color circuit (C6); also, pin-3 of U4 should be active high and low. (See figure 1 in the illustrations section).

When the monitor is suspected of a problem, check for all correct power supply voltages as shown in the schematic. Isolate incorrect voltages to either the monitor power supply or to the circuit receiving the voltage.

NOTE: The Color X-Y Monitor contains a circuit that shuts off the high-voltage oscillator when no vertical or horizontal inputs are present. DO NOT ATTEMPT TO RAISE OR LOWER EITHER INPUT WHEN TESTING THE MONITOR. DOING SO WOULD CREATE EXCESSIVE DEFLECTION CURRENT THAT COULD SEVERELY DAMAGE THE MONITOR. For testing the monitor, use only the outputs of the G-80 hardware. In addition, DO NOT operate the monitor WITHOUT proper fuses in the main AC line. If a monitor is blowing main fuses, check the deflection amp power transistors Q605, Q606, Q705 and Q706, WITH THE POWER OFF. Shorted transistors or diodes in the deflection amplifiers will also blow main line AC fuses.

Check the transistors in the color drive circuits for shorts or opens when one or more colors is missing from the display, and the G-80 boards are known to be good.

# COLOR X-Y MONITOR AND G-80
# CIRCUIT DESCRIPTION

To begin our discussion of the Color X-Y Monitor, let's first pay tribute to the "other kind of monitor" - the raster-scan. As you may remember from your knowledge of raster-scan displays (like those in a TV), that the electron-beam inside the tube always moves in a predictable way. That is, it always starts at the top left of the screen and scans across it, forming a pattern of horizontal lines on the inside surface of the tube as it moves downward. When it gets to the bottom, the beam is forced back to its starting point and repeats the raster-scan movement. To create a simple display (for example, a large "+" symbol) on the raster-scan monitor, we figure out first, where we want it to appear on the screen; let's say the center, in this case. Then we generate a video signal that represents the "+", plug the signal into the monitor, and we get a "+" on the display. What we have done is intensify the electron-beam so that only those points corresponding to the "+" light up on the raster. (To see how it would look close-up, refer to figure 2 in the illustrations section.)

Notice how the vertical line is not much of a line, but more a column of stacked lines. This occurs because the raster lines, which run horizontally inside the CRT, are spaced slightly as the beam traces them. So what we see, looking at our line from top to bottom is a tiny segment of the lit up raster, then a black space, another lit up segment, another black space, and so on. Now the horizontal line of our figure is perfect, one solid, lit up line corresponding to that particular "raster". The fact that you can't get high-quality traces in both directions is what led to the development of the X-Y monitor. If we create that same centered "+" on an X-Y display, we would see two perfect, solid lines - no gaps anywhere. (Refer to figure 3.) What produces the high-quality, solid lines in any direction in an X-Y monitor is the electron-beam inside the CRT (there are actually three electron-beams, one for each of the three colors, red, green, and blue, although it is often simpler to think of it as one beam). Unlike the beam in a raster-scan unit, the X-Y beam can be moved in any direction we choose. All we have to do is determine where we want to move it. We also need to tell the beam when to turn on, or intensify, to "draw" the design we want, how big to make the

design, what color the lines should be, what angles the lines will take, and when to stop drawing. For now, remember that we are directly influencing the X-Y beam to create our lines by moving it and turning it on when necessary; in the raster-scan, all we had to do was turn on the beam at the right times.

Important differences between the raster and X-Y monitors are that the X-Y's have no need for vertical or horizontal oscillators and drive circuits, since these predetermine the electron-beam's movement. Also, no flyback pulse is needed in the X-Y to move the beam to the top of the raster. However, a very high voltage is still necessary in the X-Y to attract the electron-beam to the front surface of the tube.

Before we delve into the circuits that make up the color X-Y monitor, let's consider how we actually control an electron-beam. Inside the picture tube neck, there is a piece of metal called a cathode. When it is charged with a voltage, it generates electrons. As the electrons are emitted, they are shaped to form a thin ray, or beam, that strikes the front of the monitor. The only way the beam will move up or down, left or right is if a magnetic field is applied around the beam. This is what the deflection coils located around the CRT neck do. There are two coils, one to move the beam up or down (VERTICAL DEFLECTION COIL) and one to move it left or right (HORIZONTAL DEFLECTION COIL). So, by running some current through either coil, we create a magnetic field around the beam to deflect it in any direction. The larger the current we put through either coil, the stronger the magnetic field and the more the beam will deflect.

While we're on the subject of beam movement, consider why this monitor is called an "X-Y monitor". Picture our "+" symbol on the screen again; the horizontal line is called the "X" axis and the vertical line is the "Y" axis, hence "X-Y monitor". Make a mental note that when we move the beam horizontally, we are moving it on the X-axis; moving the beam vertically occurs on the Y-axis. Let's look closer at the color X-Y monitor circuits and see where this deflection coil current comes from. (For the following explanation, please refer to the schematic of the monitor in this manual.) The circuitry primarily consisting of IC 600 (15-2156-01) accepts two varying voltage levels, one for Vertical, one for Horizontal, from the G-80 boards. These

voltages are called ANALOG signals because they represent all voltage levels between two pre-determined levels.

Let's say that we want an analog signal that can vary between two voltages, +3 and -3 volts. We could control it to look like this on an oscilloscope:

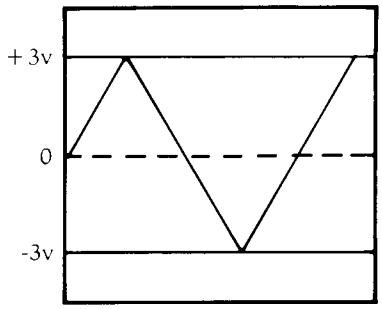


As the signal changes, it moves through all possible voltage levels that exist between +3 and -3 volts. Don't confuse this type of signal with a digital one. The digital signal switches between 0, and typically, +5 volts. It does not drop to a negative voltage level. As these varying voltages come into the X-Y monitor, they activate, first the Input Driver, intended to set a proper reference, and the X and Y power amplifiers (Q 600-606, Q 700-706). These amplifiers control the current that flows into the X and Y deflection coils, depending on the voltage levels on the inputs, and the input current set by Limiters Q 201, 202, 251, 252. Remember that this current controls the electron-beam movement, so if we vary the input voltage, we vary the output current and the direction of the beam. The following chart will clearify this:

| | INPUT VOLTAGE | BEAM MOVEMENT |
|---|---|---|
| Y-AMP | Positive | Up |
| (Vertical) | Negative | Down |
| X-AMP | Positive | Right |
| (Horizontal) | Negative | Left |

Earlier, we said that there has to be a way to turn on, or intensify the electron-beam to create an image on the screen. Well, there are three more inputs to the X-Y that allow us to do just that; they are the color inputs R,G,B and they accept analog signals from the G-80 hardware. These color

signals activate the three color electron-beams through the circuits in the Video PCB. Using what we know so far, let's apply it to an actual example of drawing something simple on the screen - a white line for instance. (Refer to figure 4 - illustrations section.)

Point A, the center of the screen, is the starting point for the electron-beam. To move the beam to point B, we have to supply voltages to the monitor's inputs that cause the beam to move at a 45 degree angle. To do that requires two increasing positive voltages on the horizontal and vertical inputs. (See the chart above). Not only are these voltages positive in this case, they also have to be equal. And if they are equal, the deflection coils will force the beam the same distance both upward, and to the right, at the same time. Moving at any other angle is just a matter of making one coil deflect more or less than the other. Again, notice that both coils force beam deflection simultaneously.

Since we don't want this 45 degree line to show up on the screen, we don't feed any voltages to the RGB inputs. But, we know the beam is at point B, awaiting further deflection. Now, we cause the voltage on the horizontal (X) input to go negative and leave the vertical voltage where it is. Also, we turn on the RGB inputs to give us a white line. From the chart, you can see that these voltages will cause the beam to move to the left, horizontally, to point C. Our line is complete, and here is what our input signals looked like during this process:

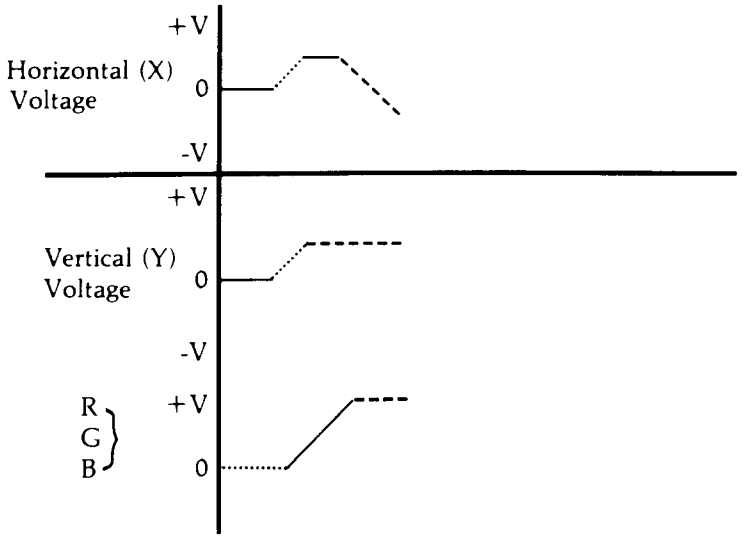

In our example, we made a very short line, considering we could have drawn one clear across the screen. In order to draw longer lines, in any direction, we simply increase the positive or negative voltage on the inputs. Remember - the higher the voltage, the more the deflection, the longer the line.

The remaining circuits in the monitor are a power supply, a CRT and brightness control (CRT PCB), and high voltage generator. Here are Functional Block, and Signal Flow diagrams for the Color X-Y Monitor:

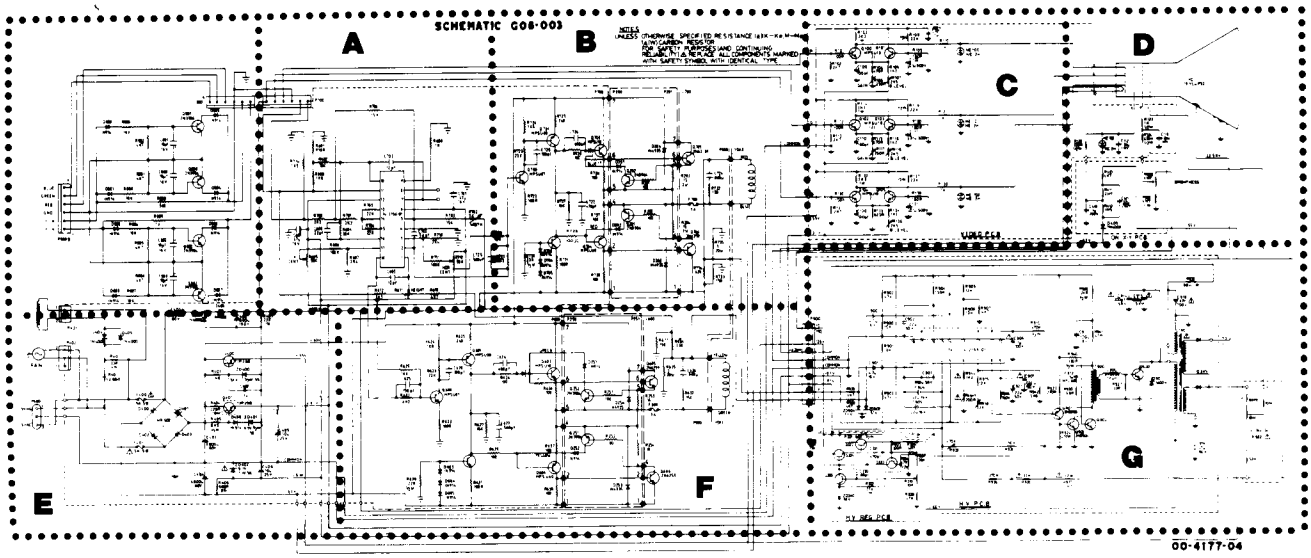

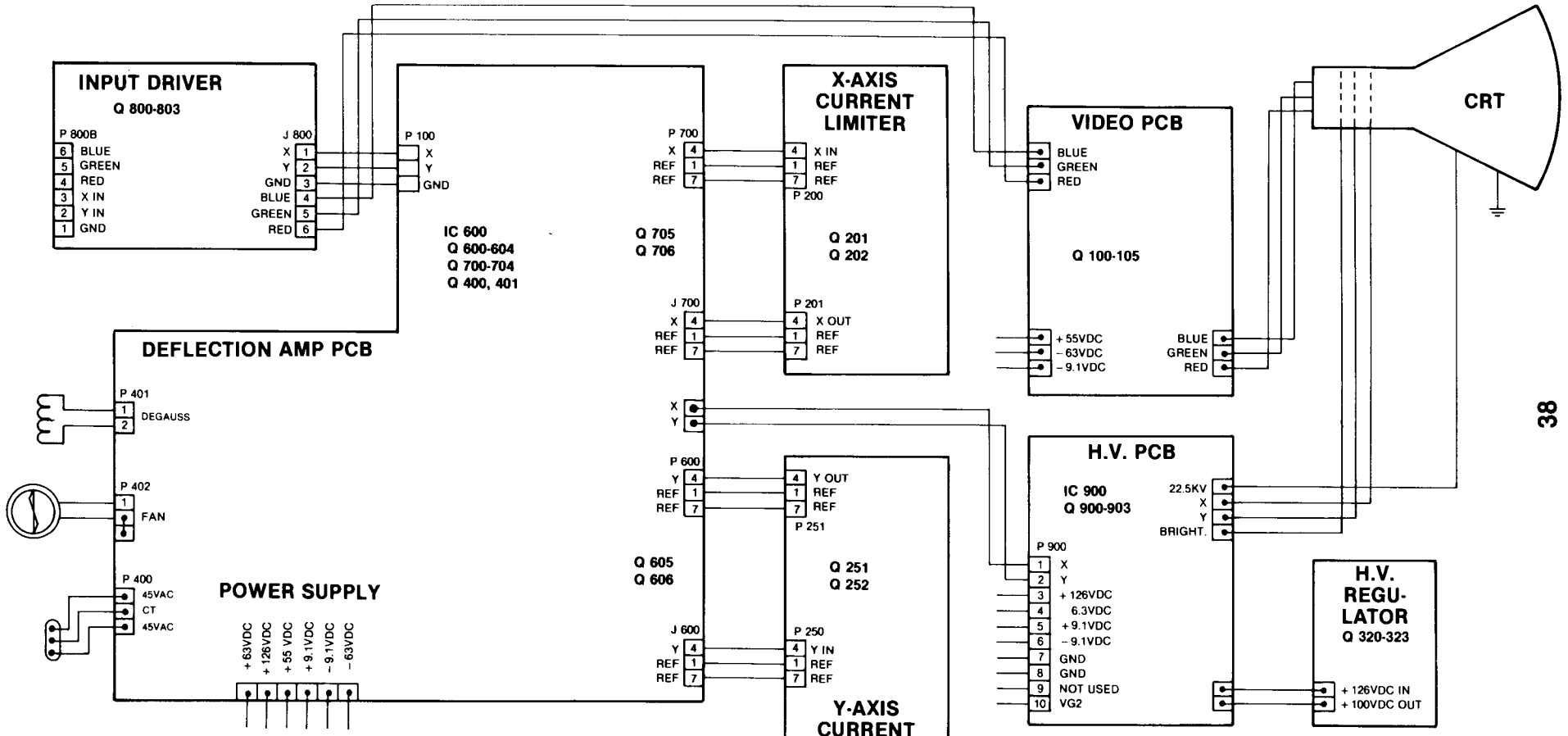


# COLOR X-Y MONITOR

## MODEL G08-003

Refering back to the monitor schematic for the following discussion, the circuitry in block A serves two purposes. First, it compensates for a type of distortion known as the pin-cushion effect. This occurs because the electron-beam must travel a greater distance when striking the edges of the CRT than when it hits the center. If we cause the beam to trace along the edges of the CRT, the beam would draw a box with its left and right sides bowed inward. To compensate for the effect, this circuit offsets the point where the beam would normally strike the CRT surface.

Secondly, this circuit contains two error amplifiers, one for the horizontal and one for the vertical inputs. Each error amp has two inputs; one is set to zero volts, the other accepts the analog signal from the G-80 system, sensing current movement in the deflection coil. The analog signal is allowed to pass through the error amps and drive the deflection (power) amps. The deflection amps are shown in blocks B and F. The outputs of the X and Y power amps pass current through their respective deflection coils. The output leads of the two coils are connected back to the analog inputs of the respective error amps, as mentioned above. This acts as an error, or feedback, signal and ensures that the current through the deflection coil remains proportional to the voltage on the error amp inputs. If this signal were not provided, there would be a slight deflection error when an analog input signal was present.

The outputs of the X and Y deflection amps can swing between +60V and -60V. This voltage is high enough to provide up to 8 amps, peak-to-peak, of current through the deflection coils.

The color drive circuits are located in schematic block C and they accept a 4 volt maximum signal on the RGB inputs. The outputs drive the three electron-beams in the CRT. Three neon glow-bulbs, NE-100, 101, and 102 act as spark arrestors for the color-drive outputs to the CRT. In block D, the CRT is shown, as well as the brightness adjustment for it. The circuit of D 409, R 411, R 410 is a spot-killer that prevents the electron-beams from burning a hole in the phosphor surface of the CRT when the monitor is turned off. Section G of the schematic consists of the high-voltage oscillator in IC 900 (14-2155-01) which operates the high-voltage transformer, T 901. This transformer is technically a flyback type, but it is not used to deflect the beam.

The IC serves two other functions; it senses the presence of the 10.3KV through R 921 and R 932 and compares it against the 9.1 supply voltage to ensure a regulated output, and also senses the varying current in either deflection coil. If no change is detected, the IC shuts down the high-voltage oscillator to prevent the beam from "burning" the face of the CRT.

Finally, the X-Y power supply is shown in block E, generating the following voltages:

| | |
|---|---|
| ±60V | to X-Y power amplifiers |
| +55V | to RGB video drivers and spot killer |
| ±9.1V | to the IC's |
| +120V | to the EHT oscillator |

A degaussing circuit is provided through D 404, D 405, and R 400. The CRT is automatically degaussed when R 400 is cooled sufficiently to conduct current through the degaussing coil.

## G-80

It's not hard to imagine how fast the input signals to the color X-Y monitor must be changing in order to produce the game displays. It's also obvious that a computer must be making all this happen. That is exactly the case with the G-80 hardware used in Color X-Y game. It contains two new boards, the X-Y Timing and X-Y Control boards that produce the X-Y monitor input signals. The G-80 still relies on its CPU, EPROM, Sound, and Speech boards to complete the computer.

But what does a digital computer have to do with producing the analog signals required by the X-Y monitor? Basically, the computer converts certain digital signals into analog ones. On the G-80 X-Y boards are circuits (some are actually single IC's) called Digital-to-Analog converters, D/A for short. These circuits accept a particular digital word, that is, a string of 0 and +5V voltage levels. The D/A converter senses the word and outputs one and only one voltage level which corresponds to the digital word. For example, we could design a simple D/A converter that would generate the following voltages when we input certain digital words:

| DIGITAL WORD | ANALOG OUTPUT |
|---|---|
| 0000 | -1 Volt |
| 1111 | +1 Volt |
| 1000 | 0 Volt |

This is a very basic case, but it shows that, for a particular D/A converter, we always produce one voltage level from the corresponding digital input. If we cycle through a variety of digital inputs, we'll get a variety of output voltages. If we do this fast enough, we actually create a rapidly varying range of output voltages. This output is exactly the kind of signal we need to drive the deflection coils in the monitor.

Now that we know where the analog signals come from, what about the digital ones? Before we can display anything on our X-Y screen, we have to ask some questions: (Answers are provided for examples sake)

| | QUESTIONS | ANSWERS |
|---|---|---|
| 1. | What do you want on the screen? | A triangle. |
| 2. | How many? | One. |
| 3. | What design? - What angle? | Equalateral (3-60$^{o}$ angles). |
| 4. | What size? | 3" on a side. |
| 5. | Positioning? | Centered on the screen. |
| 6. | What colors? | 2 sides white, 1 side blue. |
| 7. | Screen alignment? | Like this: |

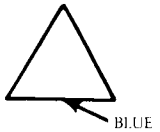

8. What will it do?

Just sit there.

9. How many lines does the electron-beam have to trace?

In our triangle, the beam must make 4 lines:

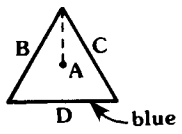


A (even though we don't see it), B, C, and D.

Now that we have our specifications, we have to store this information someplace so the Timing and Control boards can get to it and understand. That place is video memory RAM (or Random Access Memory). It holds 4096 eight-bit words or bytes. Naturally, we don't place all this into memory and hope the X-Y boards can find it; it's stored in an orderly fashion.

First, we divide the video memory into two main groups - let's call them 1) The Symbol Instructions and, 2) The Line Instructions. Into the Symbol Instructions Section we store one group of ten words for every symbol or design we put on the screen. In our example, we have only one symbol, so we use only 10 words. Into the Line Instructions Section we put one group of four words for every Line that the beam has to draw. So, for our triangle, which requires 4 lines, we would store 4 groups of 4 words in the Line Instructions space. Every word we store in memory has one and only one address, so the same word can be called on over and over. Now let's look closer at the Symbol Instructions memory space. Here is what the 10 words do: (Don't be concerned with the actual values of those words right now.)

WORD 1 — It tells the X-Y boards either to make the beam draw the symbol in this group of words or not to draw it. And the same word informs the boards that either this group of words is the only group or that there are more 10-word groups to follow.

WORD 2 and 3 These tell the boards where the beam is on the X-axis.

WORD 4 and 5 These tell the boards where the beam is on the Y-axis. The last four words then, give the exact coordinates of the electron-beam.

WORD 6 and 7 Words 6 and 7 tell the X-Y hardware what the first address is of the Line Instructions section.

WORD 8 and 9 These tell the hardware how the complete symbol (our triangle) will appear on the screen, or at what angle.

WORD 10 This word tells what the overall size of the design will be.

Again, since we're only making one design, there will be no more 10-word groups after the one above. Now take a look at the Line Instructions section of memory:

GROUP 1

WORD 1 This word tells the G-80 boards either to blank or to unblank the line. And, it informs the boards that either additional 4-word groups follow or no more groups follow. Finally, it defines the color this particular line is to be.

WORD 2 This word represents the length of the line the beam is to draw.

WORD 3 Word 3 tells the hardware at what angle the beam should make its line. $45^{o}$?, $90^{o}$?

WORD 4 Word 4 defines in which of the four sections of the screen the line is to appear - which quadrant.

The remaining 4-word groups contain the same representations of their respective lines, as in Group 1. The values will be different, of course,

depending on how the lines differ. In our triangle example we would find 3 more groups of four words after Group 1.

By now, you may be wondering what all these "words" really are. Since we are dealing with a digital computer, the "words" we described above must be digital. More accurately, they are digital values of the specifications required to create our designs. We have taken the specifications for sizes, angles, shapes, colors and locations and converted them into digital words and create displays that the word represent.

Before we go any further, you should know that the words read from the video RAM didn't get there by magic. The microprocessor put them there. All words that represent all the characters and designs in a game are kept safely in EPROM (Erasable Programmable Read Only Memory), on the EPROM board. When the game is powered up the CPU moves the various word groups from EPROM to RAM. Once situated in video memory, the words are made available to the Timing and Control boards to create displays. Briefly, here is what the two X-Y boards do with the words:

After all the character words are loaded into video RAM, the Program Counter is forced to call on the first RAM address. Here the Program Counter finds the first word in the Symbol Instructions section. One at a time, these ten words are taken out of RAM and latched into specific parts of the X-Y boards. This sequence is controlled by the Timing Generator which generates 15 active-low signals; only one signal pulses low at a time to latch the words. Next, the following sequence occurs:

1. Word 1 is latched into U52, Last Symbol block.

2. Words 2 and 3 (from the Symbol Instructions) are loaded into the X-axis Up/Down counters.

3. Words 4 and 5 are loaded into the Y-axis Up/Down counters.

4. Words 6 and 7 are stored in the Vector Address counter.

5. Words 8 and 9 are stored in the Symbol Angle latch.

6. Word 10 is loaded into the Serial Multiplier.

Now the first 10 words of a character we wish to display are stored somewhere. If we had not wanted to draw this character, the Program Counter would have jumped to the next set of 10 symbol words, if there were another symbol. Once the Program Counter is finished moving out the words, the Vector Address counter takes control of memory. This switching between the Program and Vector Address counters is governed by the Multiplexer. Through it, the G-80 Address Bus or one of the other counters can address video memory. Only one device is allowed access to memory at a time. When it is the Vector Address counter's turn to get into memory, the counter addresses the first word of the Line Instructions section. The reason for this, is that the Vector counter was previously loaded with words 6 and 7 in the Symbol Instructions section. These words tell the Vector Address counter the locations of the first word in the Line Instructions section. Now the Vector counter causes the Line Instruction words to be moved out of memory, one at a time. Here is what happens to the group of four words:

1. Word 1 is stored in the Color Latch and in U52, Last Vector.

2. Word 2 is stored in the Vector Length counters.

3. Word 3 is loaded into the Vector Angle circuit.

4. Word 4 is used in the Vector Angle circuit.

Up to this point then, 10 words that describe some symbol and 4 words that represent one line in that symbol have been clocked out of memory. When the Vector Address counter takes out the last group of words that represents the last line to be drawn, memory access is switched back to the Program Counter. It will now either restart the sequence as before (if there is another symbol to be drawn) or it will stop until the counter is reset to the beginning again.

Now the system is ready to draw its first line, to actually move the beam, because we have given it exact specifications to do so. The position of the electron-beam is now known, (Words 2 through 5 in the Symbol Instructions) so

we know where the beam will start to draw. Then, the X-Y boards calculate the length and angle of our first line. And they know the color, if any, of this line. (In our triangle, recall that our first line, A, is one that we shouldn't see, although it must be drawn. We also know that it must be drawn at a $0^{o}$ angle, straight up.) The boards calculate the line length and angle by assigning a certain number of digital clock pulses to these qualities. The circuitry acts as a digital "ruler" and "protractor" and measures any line, in terms of how many pulses in length and angle it is. All this figuring is performed by the Full Adder's, 2708 EPROM and Rate Multipliers. The output of each Rate Multiplier (XCL and YCL) is a string of clock pulses that clock the respective Up/Down counter, X or Y. But the pulses are not just random pulses, they are the digital equivalents of a line with a particular length and angle. So we clock both Up/Down counters at the same time with these pulses. Doing so we force the counters to start counting from the beam position words previously stored in the counters. The important point is this; if we change the digital values of the beam position words, we change the position of the beam through the D/A converters. How far, and at what angle we change the beam depends on the amount of pulses applied to the Up/Down counters. Just before the beam is moved, the color of the line (black included) is sent to the monitor through the RGB D/A converters.

There you have it - one line. For more lines, the G-80 system rapidly follows the same procedure of reading the symbol and line words, latching them, calculating line values, color values, and then forcing the beam line-by-line to form complete symbols.

Notice that throughout our discussion, we have mentioned the microprocessor's role just once; loading the character word into memory. During an actual game however, it does more than act as a "loader". Whenever we want to move our symbols on the screen, for example rotate the triangle, we need some way of changing all those words to represent new lines and angles. The CPU fulfills this job nicely. Under program control, the CPU is told when and how to alter these words to create a whole range of dynamic displays - different colored lines, new angles, longer or shorter lines, bigger or smaller characters, whatever the game play calls for. Also, the microprocessor governs functions such as player control and coin inputs, or sound and speech outputs.

The CPU then, gives us the variety and color in our X-Y games. - PLEASE NOTE: The designations in parenthesis will be used throughout the following detailed discussion to refer the reader to the proper schematics. C = X-Y Control Board (P/N 800-0163) sheets 5 and 6. T = X-Y Timing Board (P/N 800-0161) sheets 5, 6, and 7. e.g. (C6) = Control Board, sheet 6.

The CPU addresses video memory, U24-U31, through multiplexer IC's U48 and U49 (C5). Character words are taken from memory as the Program Counter, ICs U33, U34, U22 (C5), addresses them through multiplexers U36, U49, U35, and U21 (C5). If Word 1 (Symbol Instructions) says to not display a symbol, the Program Counter is advanced 10 counts by U33, a full adder, which adds 10 to the counter when signal ADD goes low. The Vector Address counter is composed of U10, U11, and U12 (C5) and is loaded with the first address of the Line Instructions from video memory's Character Data Bus, CD0-CD7. The CPUs Data Bus, D0-D7, is brought to the memory through a bi-directional buffer, U14 (C5). The signal labelled FETCH (C5) latches the various Character Data words from memory. The MUX (C5) signal commands the multiplexer ICs to allow either the CPU, Program Counter or Vector Address counter to address memory. MEMR (memory read) and MEMW (memory write) come from the CPU board to read from or write to the RAM. Signal VCE (C5), Vector Clock Enable, increments the Vector Address Counter. PCC (Program Counter Clock) is the string of pulses that advances the Program Counter; PCR (Program Counter Reset) ensures that the Program Counter starts counting at the first location in video RAM each time PCR goes low. This signal occurs first at power-up and then 40 times a second during program execution. So, it causes the X-Y monitor to draw and re-draw each symbol on the screen 40 times a second. The signal is generated from the master clock (crystal Y1 and U14, T7) by U31-U34 and U22 (T7). The other clock signals (VCE, PCC, FETCH, ADD, MUX, and VCL) are all generated by the X-Y Timing board (T7).

The outputs of the Last Symbol and Last Vector latches (U52, T7) are AND gated together with the signal END, which originates from the Control board's U18 (C6). When U18's output goes low, it signifies that no more symbols are to be drawn. Then the Program Counter is reset by the 40 Hz signal to the start of the video memory to repeat the display sequence. U22 (T7) is the DRAW latch and its output, through U21, creates the DRAW signal which initiates a

sequence that causes the beam to draw. This sequence occurs on the Timing Board, sheet 6; by this time, all video words have been stored in their proper places in the system. On the Timing Board (T7), the vector angle is in U56, the symbol angle in U55. So when DRAW goes high, it causes strings of digital pulses that represent the vector and symbol angles to be generated. These streams of pulses (from U28, T6) are the ones that clock the X and Y Up/Down counters, shown on T5 (U15-U20). U25 (T6) tells the counters in which direction to count, up or down (D/U X, D/U Y). Then, the outputs of the Up/Down counters, X and Y, become the digital words that are converted to analog signals by D/A converters U1 and U4 (T5). On Amps U2 and U3 (T5) convert current from the D/A converters to voltage levels. These levels drive the Vertical and Horizontal inputs to the monitor. Signals DRAW and VCL are combined in U28 (T6) to form DCL (Draw Clock). This signal clocks down the Vector Length counters U15, U16 and U17 (C6) which contain words that represent various lengths of the lines to be displayed. When the counters have counted down to 0, the END signal becomes active. As the X and Y Up/Down counters are clocked, their outputs are sensed by U5-U10 (T5), which are multiplexers. The multiplexers are necessary to tell the system when the beam is off the screen. It does this by generating the BOS signal (T5). Then BOS is AND gated with DRAW at U5 (C6), to blank (turn off) the beam whenever BOS goes low.

U3 (C6) compensates for the inherent delay in deflecting the electron-beams. It provides a number of taps to select a range of delay times. From U2 (C6), the color word is read and applied to the RGB D/A converters U5, U1 and associated diodes and resistors. The RGB outputs go directly to the color X-Y monitor.

U50, a 74LS154 (T7) decoder IC, selects one of 15 outputs by making the output low. The outputs sequentially store the video memory words, one at a time. U50 is enabled at pin 18, forty times per second by U22 (T7), and at pin 19 by U21. U51 sequences U50 through its 15 count cycle; at count 14, pin 16 of U50 goes low to initiate the DRAW signal through U40, U21 and U22 (T7).

The circuitry at the top of schematic C6 (U45, U51-U54) is not used in generating and displaying characters on the X-Y monitor. Its function is to perform lengthy calculations under software control.

# Illustrations

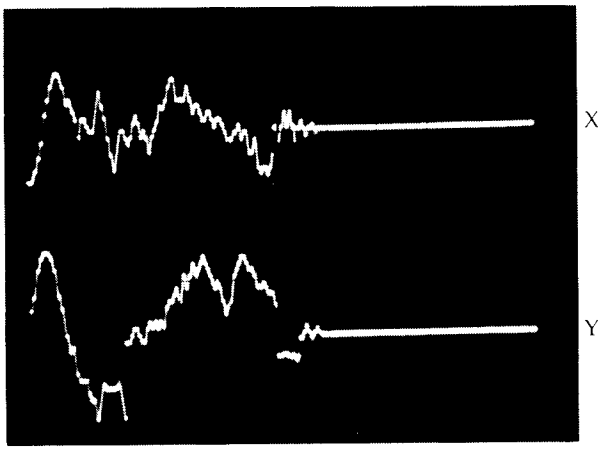


Figure 1

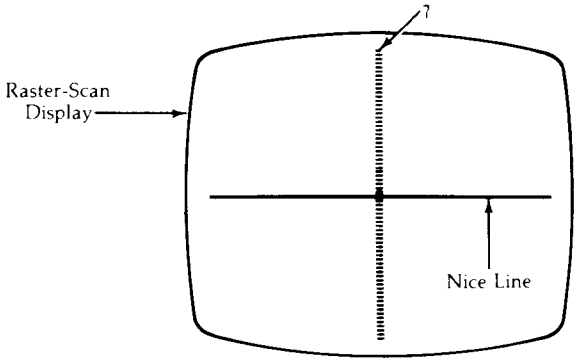


Figure 2

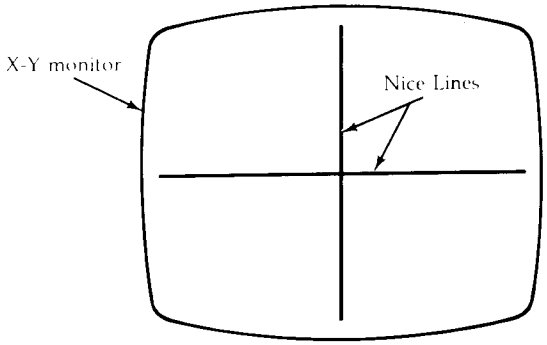


Figure 3

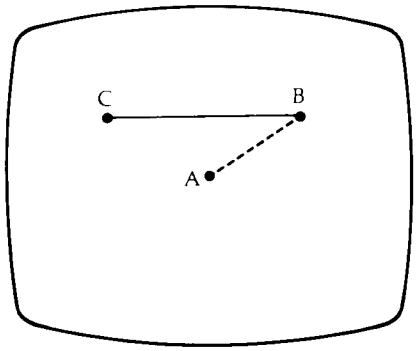


Figure 4

## ADJUSTMENTS AND SPECIFICATIONS

On the X-Y Timing Board, there are two potentiometers that adjust the outputs of the X and Y current-to-voltage converters (U2 and U3, respectively); they are:

| | |
|---|---|
| R3 (X) | U2 |
| R6 (Y) | U3 |

On the monitor, there are a number of factory-set adjustments. DO NOT USE THESE CONTROLS. They are:

| | |
|---|---|
| R106 | R917 |
| R117 | R918 |
| R611 | R920 |
| R702 | |

The following controls can be used to adjust the monitor if necessary:

| | |
|---|---|
| R605 | Vertical |
| R712 | Horizontal |
| R107 | Red |
| R118 | Green |
| R136 | Blue |
| R930 | Brightness |
| R922 | Focus |

Input specifications from the G-80 boards to the color X-Y monitor are:

| | |
|---|---|
| Vertical Input | $\pm$3V maximum |
| Horizontal Input | $\pm$4V maximum |
| Red Input | +4V @ full brightness |
| Green Input | +4V @ full brightness |
| Blud Input | +4V @ full brightness |

VOLTAGE ANALYSIS FOR THE G08-003 COLOR X-Y MONITOR

DEFLECTION PCB

P 900 (EHT)

| | |
|---|---|
| Pin 1 | 2.8 VAC |
| 2 | 3.5 VAC |
| 3 | -9.1 VDC |
| 4 | 9.1 VDC |
| 5 | GRD |
| 6 | GRD |
| 7 | 5.0 VAC |
| 8 | 120 VDC |
| 9 | OPEN |
| 10 | 400 VDC |
| D 401 - cathode | 63 VDC |
| D 403 - cathode | 63 VDC |
| D 400 - anode | -63 VDC |
| D 402 - anode | -63 VDC |
| ZD 400 | 59 VDC |
| ZD 401 | 9.0 VDC |
| ZD 402 | -9.1 VDC |

Q 400 - base 59 VDC, - emitter 58.8 VDC, - collector 63.5 VDC

Q 401 - base 9.7 VDC, - emitter 9.1 VDC, - collector 17 VDC

IC 600

| | | | |
|---|---|---|---|
| Pin 1 | 0 | 10 | 0 |
| 2 | 4.2 VDC | 11 | 0 |
| 3 | 0 | 12 | -9.1 VDC |
| 4 | 0 | 13 | 0 |
| 5 | 0 | 14 | 0 |
| 6 | 9.1 VDC | 15 | 0 |
| 7 | 7.5 VDC | 16 | 0 |
| 8 | 0 | 17 | 0 |
| 9 | 0 | 18 | 4.2 VDC |
| Q 600 - collector | 34.5 VDC | Q 700 - collector | 35.9 VDC |
| Q 601 - collector | 0.8 VDC | Q 701 - collector | 0.5 VDC |

| | | | |
|---|---|---|---|
| Q 602 - collector | -0.5 VDC | Q 702 - collector | -0.8 VDC |
| Q 603 - collector | 63.5 VDC | Q 703 - collector | 63.5 VDC |
| Q 604 - collector | -63.9 VDC | Q 704 - collector | -63.5 VDC |
| Q 605 - collector | 63.9 VDC | Q 705 - collector | 63.9 VDC |
| - base | 0.1 VDC | - base | 0.1 VDC |
| - emitter | 0.1 VDC | - emitter | 0.1 VDC |
| Q 606 - collector | -63.9 VDC | Q 706 - collector | -63.9 VDC |
| - base | -0.1 VDC | - base | -0.1 VDC |
| - emitter | -0.1 VDC | - emitter | -0.1 VDC |

EHT PCB

IC 900

| | | | |
|---|---|---|---|
| Pin 1 | 0.4 VDC | 10 | 1.7 VDC |
| 2 | 0 | 11 | 8.7 VDC |
| 3 | 0.1 VDC | 12 | 8.7 VDC |
| 4 | -9.1 VDC | 13 | 2.3 VDC |
| 5 | 9.0 VDC | 14 | 9.0 VDC |
| 6 | 0.7 VDC | 15 | 0.5 VDC |
| 7 | 1.7 VDC | 16 | 0.1 VDC |
| 8 | 7.5 VDC | 17 | 8.7 VDC |
| 9 | 0.1 VDC | 18 | 0 |

| | |
|---|---|
| Q 901 - emitter | 8.0 VDC |
| - base | 7.5 VDC |
| - collector | 0.3 VDC |
| Q 902 - emitter | 0 |
| - base | 0.3 VDC |
| - collector | 0.5 VDC |
| Q 903 - emitter | 0 |
| - base | 0.5 VDC |
| - collector | 3.0 VDC |

# UNIVERSAL SOUND BOARD
## CIRCUIT DESCRIPTION

The Universal Sound Board operates under control of stored program data. These digital signals are converted to an analog signal (clocked sinusoidal wave), by the use of digital-to-analog converters, summed together and fed through an output amplifier. This final output may or may not be filtered.

The sound board is sub-divided into three independent and identical sound blocks or envelops (CTC0, CTC1 and CTC2). Refer to the table for IC assignments for the individual blocks.

A sound block consists of (a) Programmable Interval Timer, an 8253; (b) a decode multiplexer which provides a WR signal for the D-to-A converters (74LS139's); (c) three independent and identical output channels (AD7524's); (d) a filtering network, made up of analog switches (4053's) and a controller IC (74LS74's); and (e) a summing amplifier (TL082's).

Under program control the sound data is simultaneously sent to the timing IC's (8253's) and the D-to-A converters. The Programmable timer generates three sine wave outputs (OUT 0, 1, 2) which provides a timing signal for the D-to-A converters and the filter network. Simultaneously, the decoder multiplexers (74LS139's) under program control develops a WR signal that allows the program data, already available, to be written into the D-to-A converters. The output of the D-to-A converters (pin 1) are fed into the op-amps (TL082's) which provides a sine wave output that varies between plus and minus two volts. The ouptut of these three channels are then sunned together by the op amps. The resulting output can then either be sent directly to the output amp or be re-routed and fed through the filtering network.

The filtering network is under control of the signal switch(s) which is developed by the controller IC's (74LS74). When the signal switch equals one (a HI), the filtering network is on, and the output is being filtered. The opposite is true when the signal switch equals zero (a LO). Circuit configuration in the analog switches are: xy to y for one (HI), and xy to x for zero (LO). The switch signal also allows development of a filtered or un-filtered noise output.

Finally, the analog sound output of the filters is then routed to the output amplifier TL082 (U1).

## STAR TREK SOUNDS

11/23/82

2 ms. clock rate (USB jumper P2 set at pin #5)

Enterprise Impulse Drive . . . . . uses SB0, channel A, switch=1

Enterprise Warp Drive . . . . . uses SB0, channels A, B and C, switch=1

Enterprise Phaser . . . . . uses SB1, channels A, B and C, switch=0

Enterprise Photon Torpedo . . . . . uses SB0, channels A, B and C, switch=1

Enterprise Red Alert . . . . . uses SB1, channel B, switch=0

Enterprise Targeting . . . . . uses SB2, channels A and B, switch=0

Enterprise Command Deny . . . . . uses SB1, channel A, switch=0

Enterprise Shields Hit . . . . . uses SB2, channel B, switch=0

Enterprise Hit . . . . . uses SB2, channels A, B and C, switch=0

Enterprise Explosion . . . . . uses SB1, channels A, B and C, switch=0, SB2, channel C, switch=0

Enterprise Introduction . . . . . uses SB0, SB1 and SB2, channels A and B, switch=1

Klingon Photon Torpedo . . . . . uses SB , channel B, switch=0

Klingon Explosion . . . . . uses SB1, channels A, B and C, switch=0, SB2, channel C, switch=0

Klingon Introduction . . . . . uses SB0, SB1 and SB , channels A and B, switch=1

Star Base Dock . . . . . uses SB0, channels A and B, switch=1

Star Base Hit . . . . . uses SB2, channels A, B and C, switch=0

Star Base Damage Critical . . . . . uses SB1, channel A, switch=0

Star Base Explosion . . . . . uses SB1, channels A, B and C, switch=0, SB2, channel C, switch=0

Star Base Bonus Used . . . . . uses SB1, channel A, switch=0

Star Base Bonus Unused . . . . . uses SB1, channel A, switch=0

Star Base Introduction . . . . . uses SB0, SB1 and SB2, channels A and B, switch=1

Saucer Warp Suck . . . . . uses SB2, channel B, switch=0

Saucer Exit . . . . . uses SB2, channel B, switch=0

Saucer Warp Suck/Exit Off . . . . . uses no channels

Nomad Moving . . . . . uses SB2, channel B, switch=0

Nomad Stationary . . . . . uses SB2, channel B, switch=0

Nomad Movement/Stationary Off . . . uses no channels

Player Change . . . . . uses SB0, channel B, switch=0

Game End . . . . . uses SB2, channel B, switch=0

High Score Music . . . . . uses SB0 and SB1, channels A and B, switch=1, SB2, channel A, switch=1

Coin Drop Music . . . . . uses SB0 and SB1, channels A and B, switch=1, SB2, channel A, switch=1

UNIVERSAL SOUND BOARD
SOUND BLOCK IC ASSIGNMENTS

| | Sound Block 0 | Sound Block 1 | Sound Block 2 |
|---|---|---|---|
| P. I. Timer (8253's) | U41 | U42 | U43 |
| Channel A | U26, U19 | U12, U3 | U27, U20 |
| Channel B | U25, U18 | U13, U4 | U28, U21 |
| Channel C | U24, U17, U7 | U14, U5, U16 | U 9, U22, U31 |
| Filter Network | U8 | U16, U9, U7, U15 | U30, U23, U31 |
| Controller IC for Filter Network | U38 | p/o U2 | p/o U2 |
| Decoder Multiplexer | U10 | p/o U11 | p/o U11 |
| Summing Amp | U6 | U9 | U23 |

TOP ASSEMBLY STAR TREK DRAWING NUMBER 700-0109

| ITEM NO. | PART NO. | QTY REQD. | DESCRIPTION |
|---|---|---|---|
| 1 | 140-0021-00 | 1 | Cover Junction Box |
| 2 | 140-0111-00 | 1 | Cabinet Model 104 |
| 3 | | | |
| 4 | 220-0178-00 | 2 | Draw Catch |
| 5 | 250-0568-01 | 1 | Logo Panel Molding |
| 6 | 250-0568-02 | 1 | Logo Panel Molding |
| 7 | 253-0228-00 | 1 | Clear Monitor Panel |
| 8 | 253-0238-00 | 1 | Plastic Bag 3.00 x 4.00 Vinyl |
| 9 | 253-0254-00 | 1 | CRT Mask, 19" |
| 10 | 253-0281-00 | 1 | Envelope, 12 x 15, Clear |
| 11 | 253-0285-00 | 1 | Horizontal Plastic CRT Bezel |
| 12 | 253-0291-00 | 1 | Logo Panel |
| 13 | | | |
| 14 | 260-0001-00 | 1 | Axial Cooling Fan |
| 15 | 280-0005-00 | 40 | Cable Tie |
| 16 | | | |
| 17 | 280-0475-00 | 60 | Staple |
| 18 | 280-0495-00 | 1 | Compression Spring |
| 19 | 281-0045-28 | 2 | Screw, 10-16 x 1.75 PN HD Phil Sheet Metal Type AB |
| 20 | 281-0045-12 | 7 | Screw, 10-16 x .750 PN HD Phil Sheet Metal Type AB |
| 21 | 281-0134-12 | 8 | Screw, 8-18 x .750 PN HD Phil Sheet Metal Type AB Black |
| 22 | 281-0185-24 | 4 | Screw, 10-16 x 1.50, 82° Flat HD Phil Sheet Metal Type AB Black |
| 23 | 281-0042-32 | 4 | Screw, 6-20 x 2.00 PN HD Phil Sheet Metal Type AB |
| 24 | 282-0017-24 | 4 | Bolt, $\frac{1}{4}$-20 x 1.50 Hex HD Machine THD |
| 25 | 282-0019-32 | 1 | Bolt, 3/8-16 x 2.00 Hex HD Machine THD |
| 26 | 283-0060-18 | 4 | Washer, #6 Flat, Steel |

TOP ASSEMBLY STAR TREK DRAWING NUMBER 700-0109

| ITEM NO. | PART NO. | QTY REQD. | DESCRIPTION |
|---|---|---|---|
| 27 | 283-0060-25 | 3 | Washer, #10 Flat, Steel |
| 28 | 283-0060-34 | 4 | Washer, #¼ Flat, Steel |
| 29 | 283-0060-40 | 1 | Washer, #3/8 Flat, Steel |
| 30 | 283-0061-06 | 7 | Washer, #10 Lock, Split, Steel |
| 31 | 283-0061-08 | 4 | Washer, #¼ Lock, Split, Steel |
| 32 | 283-0061-10 | 1 | Washer, #3/8 Lock, Split, Steel |
| 33 | 283-0071-14 | 1 | Nut, 10-24 Wing, Steel, Machine |
| 34 | | | |
| 35 | 289-0002-02 | 1 | Cable Clamp .250 Nylon |
| 36 | 320-0020-00 | 4' | Sealant Foam |
| 37 | | | |
| 38 | 320-0053-00 | .66' | Duct Tape |
| 39 | 420-0030-00 | 1 | Decal, Caution 115V |
| 40 | 420-0656-00 | 1 | Decal, Self-Test Instructions |
| 41 | 420-0713-00 | 1 | Advertising Pouch |
| 42 | 420-0793-00 | 1 | Decal, Toll-Free Numbers |
| 43 | 420-0855-00 | 1 | Star Trek Manual |
| 44 | 420-0856-00 | 1 | Interior Graphic |
| 45 | 420-0857-00 | 1 | Left Side Graphic |
| 46 | 420-0858-00 | 1 | Right Side Graphic |
| 47 | 420-0860-00 | 1 | Decal, Dip Switch Settings |
| 48 | 420-0861-00 | 1 | Box Decal |
| 49 | 420-0864-00 | 1 | Light Baffle |
| 50 | | | |
| 51 | 420-0912-00 | 1 | Decal, FCC Compliance |
| 52 | 420-0913-04 | 1 | Decal, Original Game Seal |
| 53 | 420-0917-00 | 1 | Decal, FCC Warning |
| 54 | 420-0936-00 | 1 | Decal, Trademark |
| 55 | | | |
| 56 | 800-0145-01 | 1 | Assy AC Junction Box |
| 57 | 800-0322-00 | 1 | Assy Fan Cord |

TOP ASSEMBLY STAR TREK DRAWING NUMBER 700-0109

| ITEM NO. | PART NO. | QTY REQD. | DESCRIPTION |
|---|---|---|---|
| 58 | 800-0375-00 | 1 | Assy X-Y Monitor |
| 59 | 800-0415-02 | 1 | Assy Light and Speaker |
| 60 | | | |
| 61 | 800-3294-02 | 1 | Assy Coin System |
| 62 | 800-3302-00 | 1 | Assy Control Panel |
| 63 | 800-3304-00 | 1 | Assy Component Shelf |
| 64 | 800-3335-00 | 1 | Assy Coin System Interface Harness |
| 65 | 800-3336-00 | 1 | Assy Control Panel Interface Harness |
| 66 | 800-3341-00 | 1 | Assy Video X-Y Interface Harness |
| 67 | 800-0255-00 | 1 | Assy AC Monitor Harness |

## Top Assembly

**700-0109**

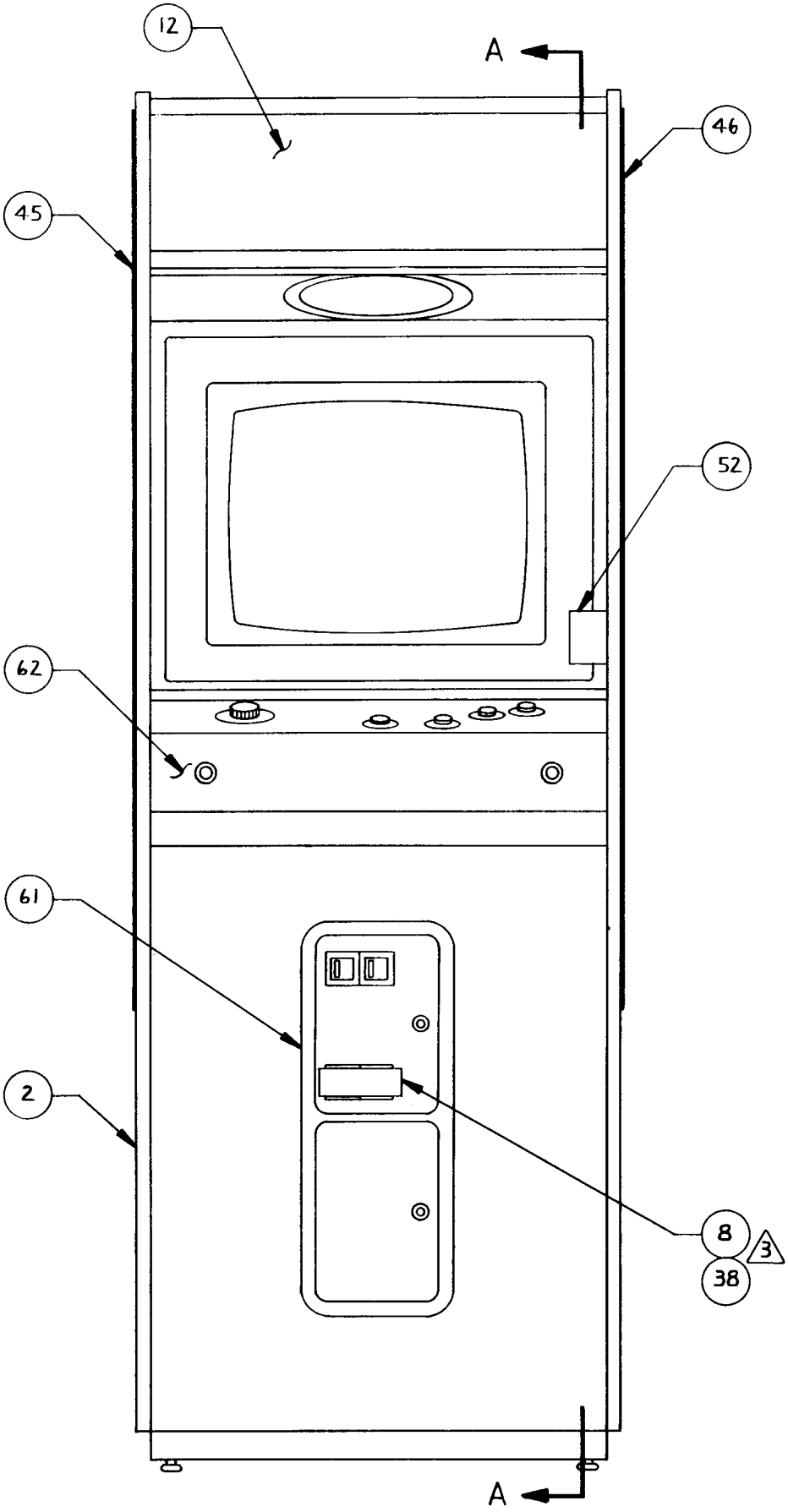

## Top Assembly

700-0109

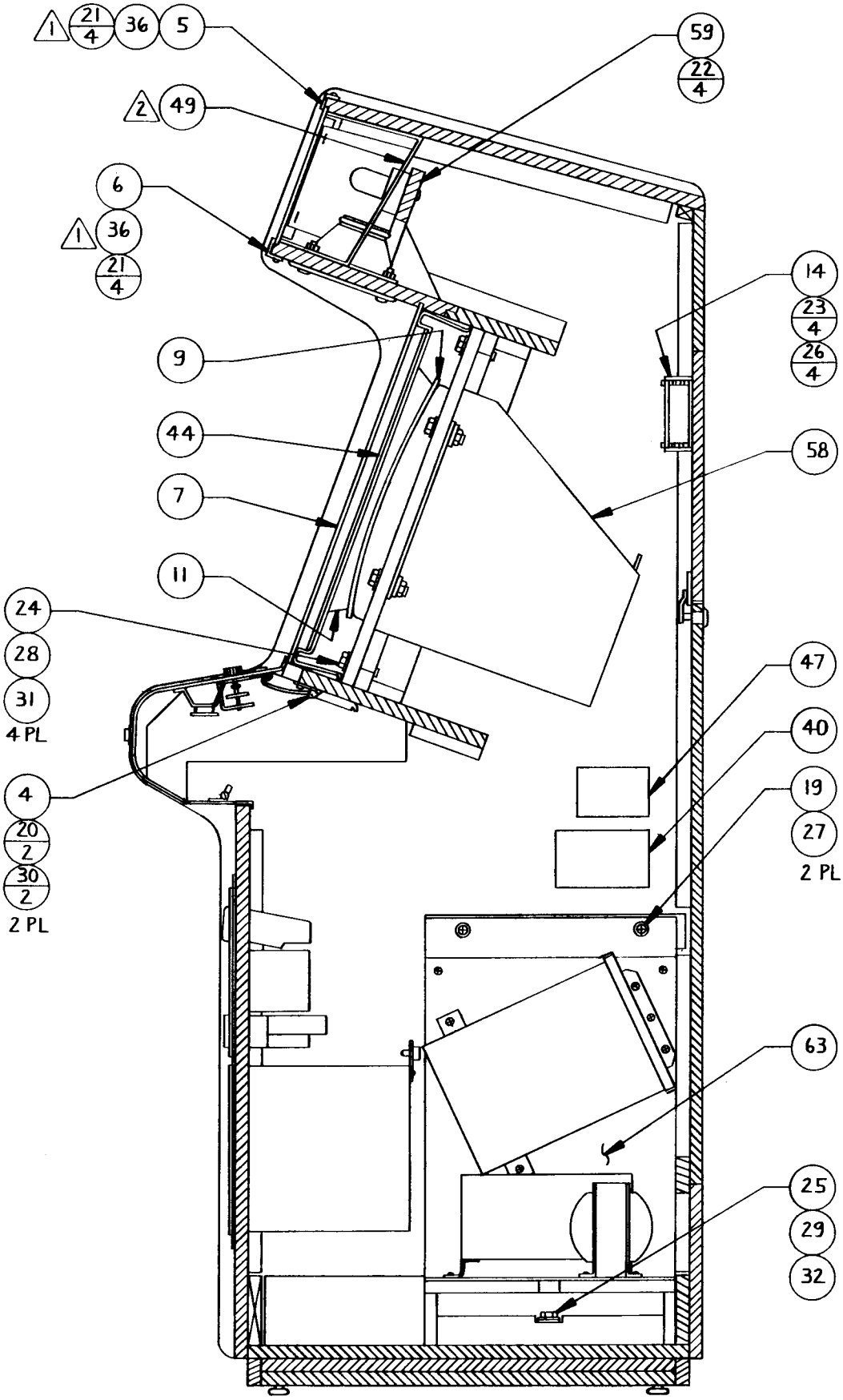


SECTION A - A

## Top Assembly

700-0109

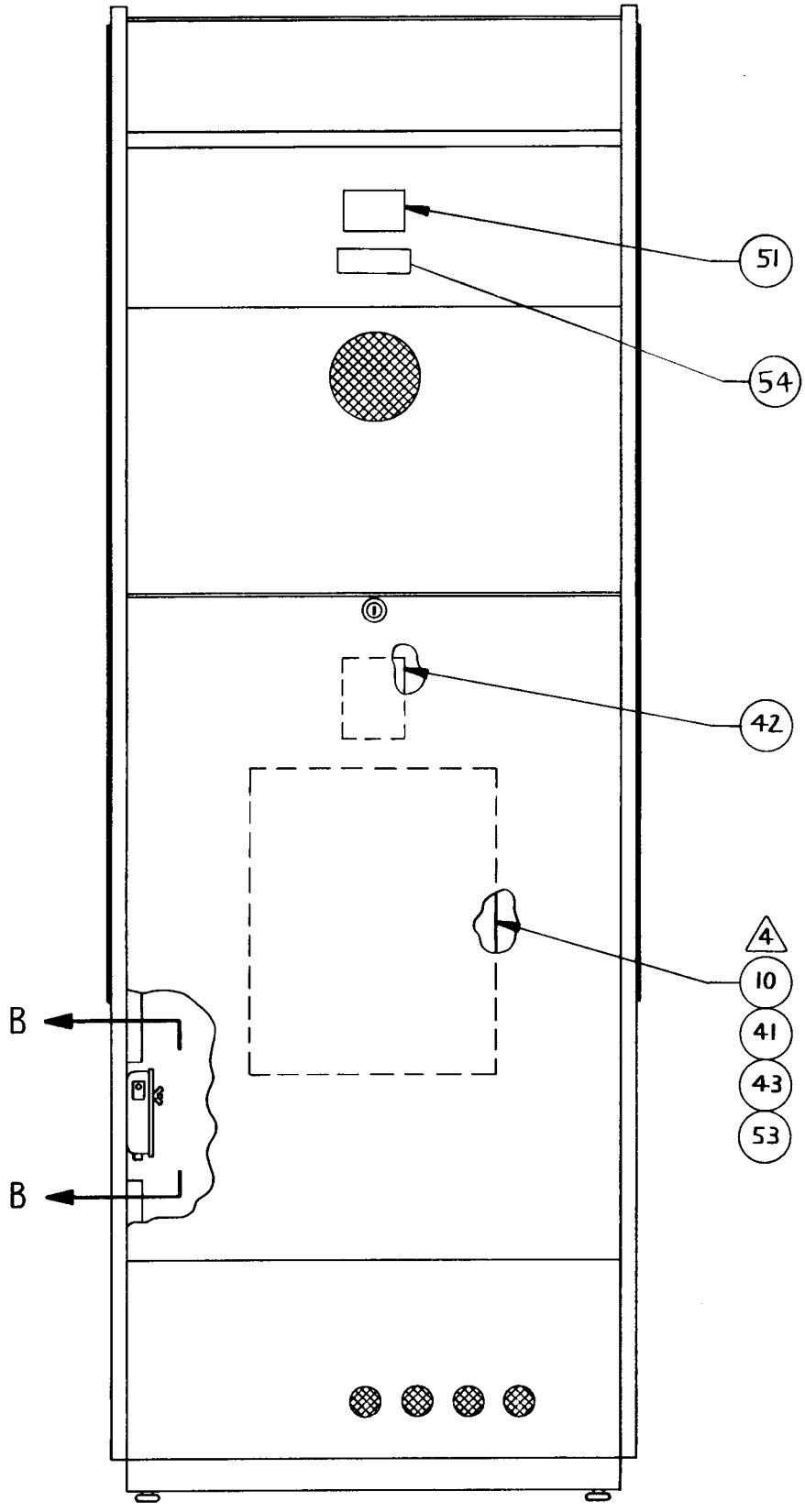

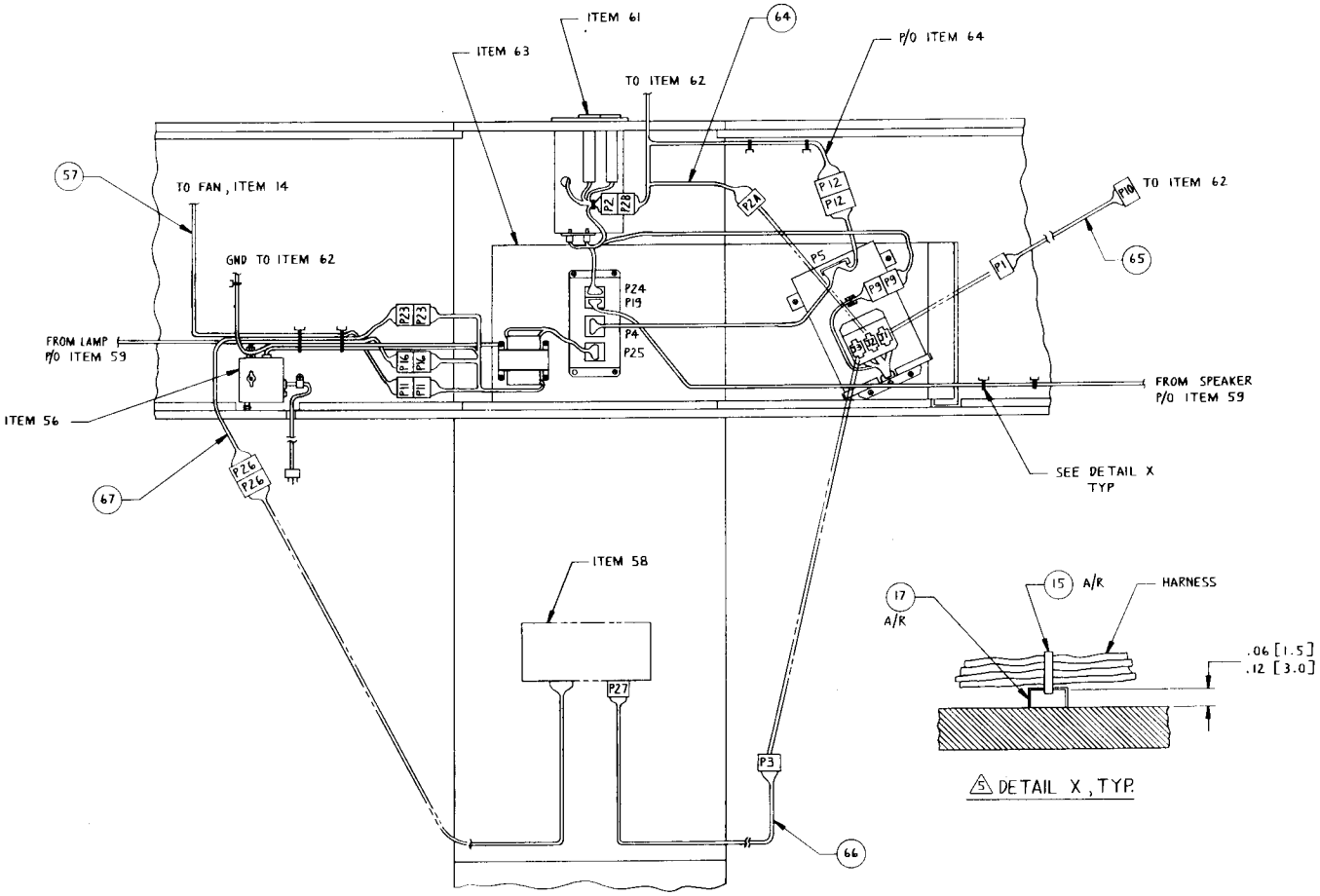
ITEM 61
64
P/O ITEM 64
ITEM 63
TO ITEM 62
57
TO FAN, ITEM 14
GND TO ITEM 62
TO ITEM 62
65
FROM LAMP
P/O ITEM 59
ITEM 56
FROM SPEAKER
P/O ITEM 59
SEE DETAIL X
TYP
67
ITEM 58
66
17
A/R
15
A/R
HARNESS
.06 [1.5]
.12 [3.0]
5 DETAIL X, TYP

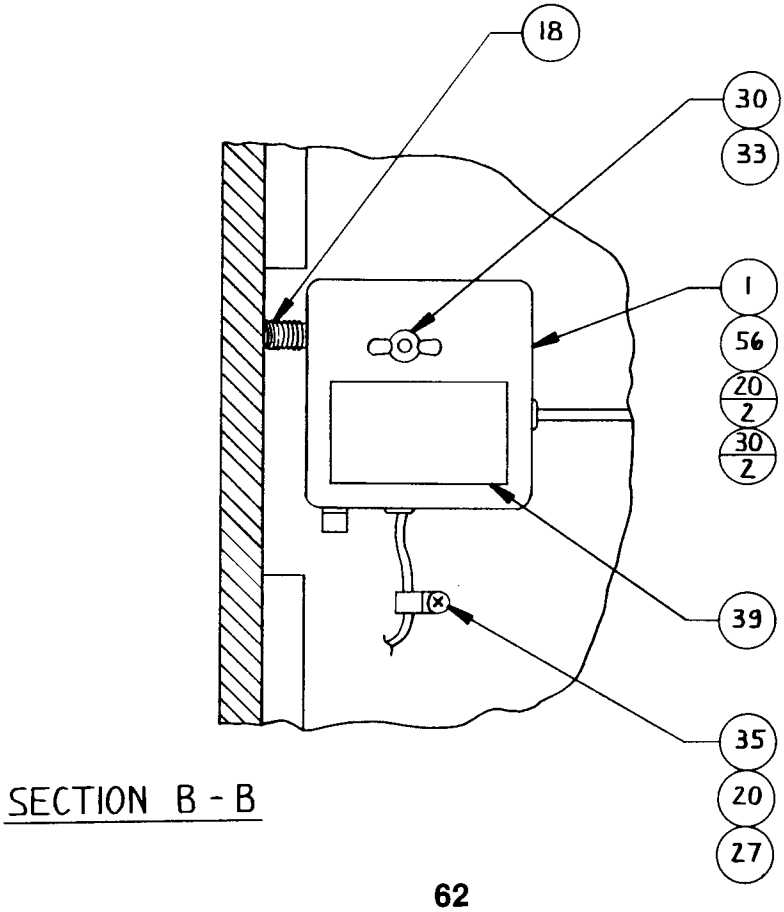
18
30
33
1
56
20
2
30
2
39
35
20
27

SECTION B - B

A.C. JUNCTION BOX ASSEMBLY DRAWING NUMBER 800-0145-00

A.C. JUNCTION BOX ASSEMBLY DRAWING NUMBER 800-0145-01

A.C. JUNCTION BOX ASSEMBLY DRAWING NUMBER 800-0145-02

| ITEM NO. | PART NO. | QTY REQD. -00 | -01 | -02 | DESCRIPTION |
|---|---|---|---|---|---|
| 1 | 140-0020 | 1 | 1 | 1 | Junction Box Metal |
| 2 | 211-0165 | 2 | 2 | 2 | Conn Quick Fem Fully Insl. .250 x .032 (AWG 18-22) |
| 3 | 211-0164 | 4 | 4 | 4 | Conn Quick Fem Fully Insl. .187 x .020 (AWG 18-22) |
| 4 | | | | | |
| 5 | 280-0361 | 1 | 1 | 1 | Bushing S/Rel AC Cord |
| 6 | 270-0001 | 1 | 1 | 1 | Filter EMI |
| 7 | 280-0007 | 1 | 1 | 1 | Bushing S/Rel 1/2 |
| 8 | 280-0362 | 4 | 4 | 4 | Electric Crimp Sleeve AWG 24-18 |
| 9 | 420-0013 | 1 | - | - | Decal 2 Amp Fuse |
| 10 | 510-0013 | 1 | 1 | 1 | Switch SPDT Cherry |
| 11 | 514-0001 | 1 | - | - | Fuse 2 Amp 250V S.B. |
| 12 | 514-0005 | 1 | 1 | 1 | Holder Fuse |
| 13 | 600-0001 | 1 | 1 | 1 | Cord Line 3 Cond. |
| 14 | | | | | |
| 15 | 600-0079 | 2 FT. | 2 Ft. | 2 Ft. | Cord Line Zip |
| 16 | 280-0005 | 2 | 2 | 2 | Cable Tie |
| 17 | 218-0002-10 | 2 | 2 | 2 | SCR PN HD Phil #6-32 x .625 Mach |
| 18 | 283-0022-00 | 2 | 2 | 2 | Nut Hex HD #6-32 Mach |
| 19 | 284-0042-00 | 2 | 2 | 2 | Washer Lock Int. Tooth #6 |
| 20 | 281-0004-12 | 1 | 1 | 1 | SCR PN HD Phil #8-32 x .750 Mach |
| 21 | 283-0024-00 | 2 | 2 | 2 | Nut Hex HD #8-32 Mach |
| 22 | 284-0044-00 | 1 | 1 | 1 | Washer Lock Int. Tooth #8 |
| 23 | | | | | |
| 24 | 284-0007-00 | 1 | 1 | 1 | Washer Flat STD O.D. #1/4 |
| 25 | 283-0025-00 | 1 | 1 | 1 | Nut Hex HD #10-24 Mach |
| 26 | 282-0005-28 | 1 | 1 | 1 | Bolt Carriage #10-24 x 1.750 Mach |
| 27 | 310-0016-16 | 1 | 1 | 1 | Insul TGB .187 ID |

A.C. JUNCTION BOX ASSEMBLY-Continued DRAWING NUMBER 800-0145-00

A.C. JUNCTION BOX ASSEMBLY-Continued DRAWING NUMBER 800-0145-01

A.C. JUNCTION BOX ASSEMBLY-Continued DRAWING NUMBER 800-0145-02

| ITEM NO. | PART NO. | QTY REQD. -00 | -01 | -02 | DESCRIPTION |
|---|---|---|---|---|---|
| 28 | 284-0004-00 | 2 | 2 | 2 | Washer Flat STD O.D. #8 |
| 29 | 420-0597 | - | - | 1 | Decal 1 Amp Fuse |
| 30 | 420-0634 | - | 1 | - | Decal 5 Amp Fuse |
| 31 | 514-0051 | - | - | 1 | Fuse 1 Amp 250V |
| 32 | 514-0053 | - | 1 | - | Fuse 5 Amp S.B. |

# AC Junction Box Assembly

800-0145

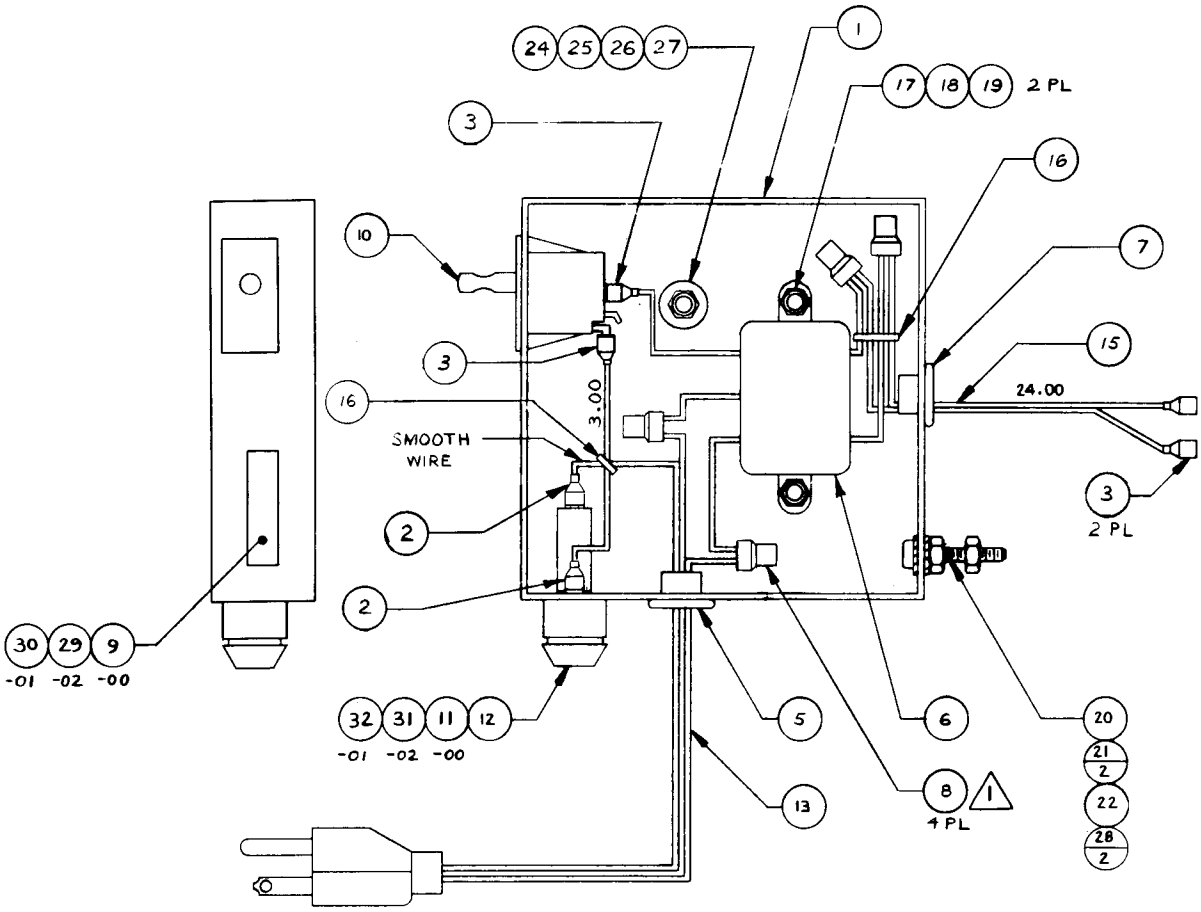

TRANSFORMER EMI ASSEMBLY DRAWING NUMBER 800-0190

| ITEM NO. | PART NO. | QTY REQD. | DESCRIPTION |
|---|---|---|---|
| 1 | 560-0055 | 1 | G-80 Power Supply Transformer |
| 2 | 212-0016 | 1 | Connector, Female, 10 Pin |
| 3 | 211-0005 | 9 | Connector Crimp |
| 4 | 211-0045 | 1 | Connector Plug Amp, 6 Pin |
| 5 | 211-0042 | 6 | Connector Socket |
| 6 | 211-0043 | 2 | Connector Plug Amp, 2 Pin |
| 7 | 600-0079 | 1 foot | Zip Cord |
| 8 | 280-0005 | 4 | Cable Tie |
| 9 | | 0.5 feet | Electric Strand Wire, Black, AWG 18 |
| 10 | 280-0359 | 3 | Electric Crimp Sleeve |
| 11 | 211-0077 | 4 | Connector Terminal Socket, 20-14 AWG |

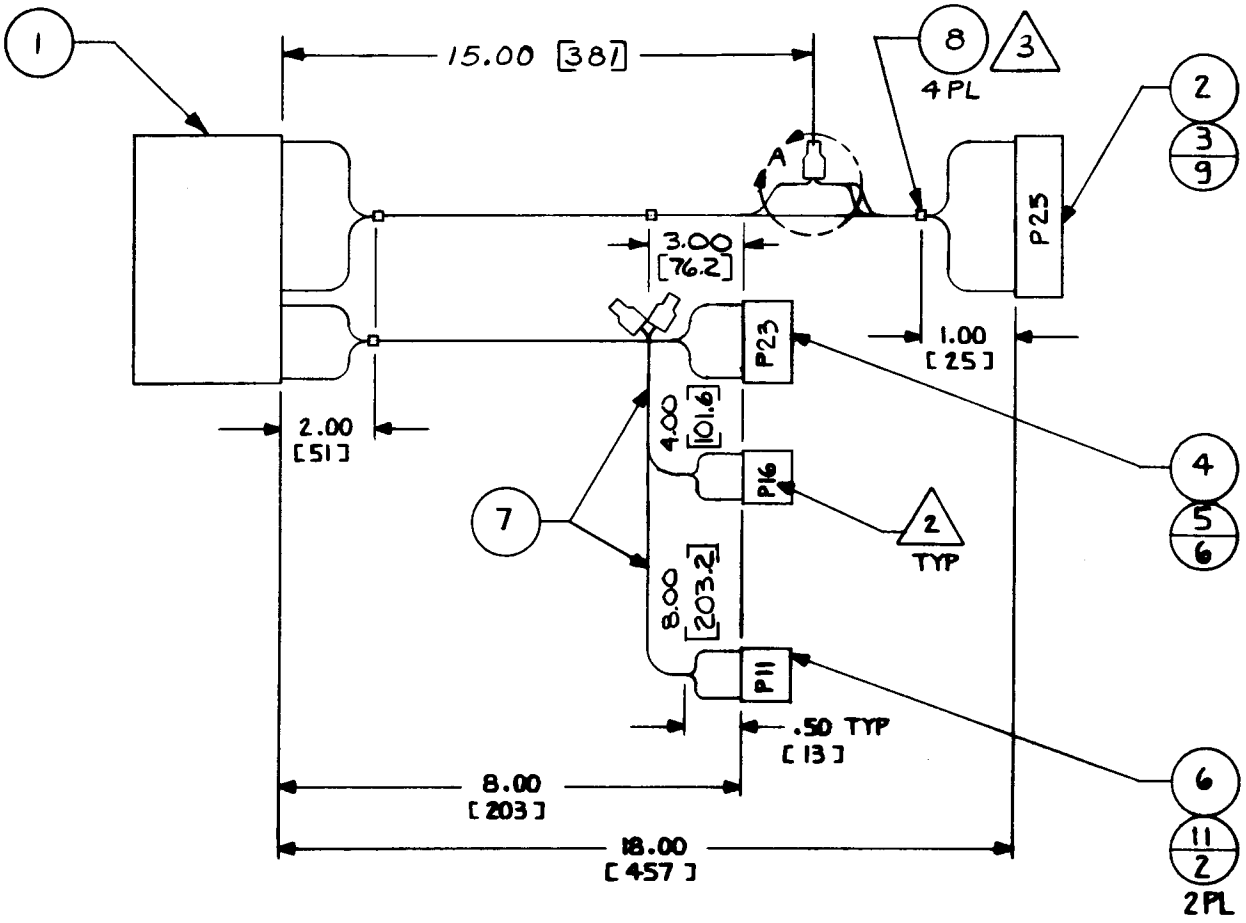
1
15.00 [381]
8
3
4 PL
2
3
9
A
P25
3.00
[76.2]
P23
1.00
[25]
2.00
[51]
4.00
[101.6]
P16
4
5
6
7
2
TYP
8.00
[203.2]
P11
.50 TYP
[13]
6
11
2
2PL
8.00
[203]
18.00
[457]

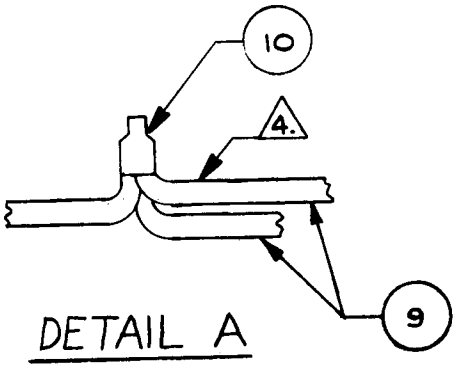
10
4.
9
DETAIL A

VOLUME CONTROL BLOCK ASSEMBLY DRAWING NUMBER 800-3282

| ITEM NO. | PART NO. | QTY REQD. -00 | -01 | -02 | DESCRIPTION | REF DES |
|---|---|---|---|---|---|---|
| 1 | 240-0001-00 | 1 | 1 | 1 | Volume Control Knob | |
| 2 | 250-0569-00 | 1 | 1 | - | Bracket Volume Control Block | |
| 3 | 289-0003-14 | 4 | 4 | 4 | Eyelet Rolled FLG HD | |
| 4 | 420-0829-00 | 1 | 1 | - | Decal, E-Z Adjust Cont | |
| 5 | 475-0007-00 | 1 | - | 1 | Pot 10K Car Panel Mount | |
| 6 | 510-0051-00 | 2 | 2 | 2 | Switch, Pushbutton Slide | |
| 7 | 420-0395-00 | - | - | 1 | Decal, Serv SW/Vol Cont | |
| 8 | 211-0041-00 | 5 | 5 | 6 | Conn Pin Amp | |
| 9 | 211-0182-00 | 4 | 4 | 5 | Terminal .110 x .020 22-18 AWG Quick, Fully Insul. Female | |
| 10 | 280-0005-00 | 4 | 4 | 3 | Cable Tie | |
| 11 | 310-0041-02 | .08' | - | .08' | Tubing .125 ID Clr Polyolefin Shrink | |
| 12 | 470-0101-00 | 1 | - | 1 | Resistor 100 ohm $\frac{1}{4}$W, 5% | |
| 13 | 600-0029-00 | 1.38' | 1.38' | - | CA 2 CNDCT Sheild 22 AWG | |
| 14 | 600-0092-47 | 1.46' | 1.46' | .75' | Wire 22 AWG Violet | |
| 15 | 600-0092-48 | 1.54' | 1.54' | - | Wire 22 AWG Gray | |
| 16 | 600-0092-50 | 1.62' | 1.62' | 1.116 | Wire 22 AWG Black | |
| 17 | 475-0034-00 | - | 1 | - | Pot 200 ohm Car Panel Mount | |
| 18 | 600-0013-00 | - | - | 3.1' | CA 1 Condition Sheild | |
| 19 | 600-0092-42 | - | - | .75' | Wire 22 AWG Red | |
| 20 | 600-0092-44 | - | - | .83' | Wire 22 AWG Yellow | |
| 21 | 211-0005-00 | - | - | 2 | Conn Crimp Lock | P24 |
| 22 | 211-0046-00 | - | - | 1 | Conn Cap Amp 6 Pin | P9 |
| 23 | 212-0005-00 | - | - | 1 | Conn Female Black 4 Pin | |
| 24 | 250-0569-01 | - | - | 1 | Bracket Volume Control Block | |
| 25 | 211-0166-00 | - | - | 1 | Conn Ring Lug #10 | |
| 26 | 283-0063-04 | - | - | 1 | Washer, #10 Lock, Ext Tooth Star | |
| 27 | 283-0070-03 | - | - | 1 | Nut, Nylon, Self Locking #10 | |
| 28 | 281-0005-06 | - | - | 1 | Screw, #10 x .375 PN HD Phil Machine | |

## Volume Control Block Assembly

800-3282-00

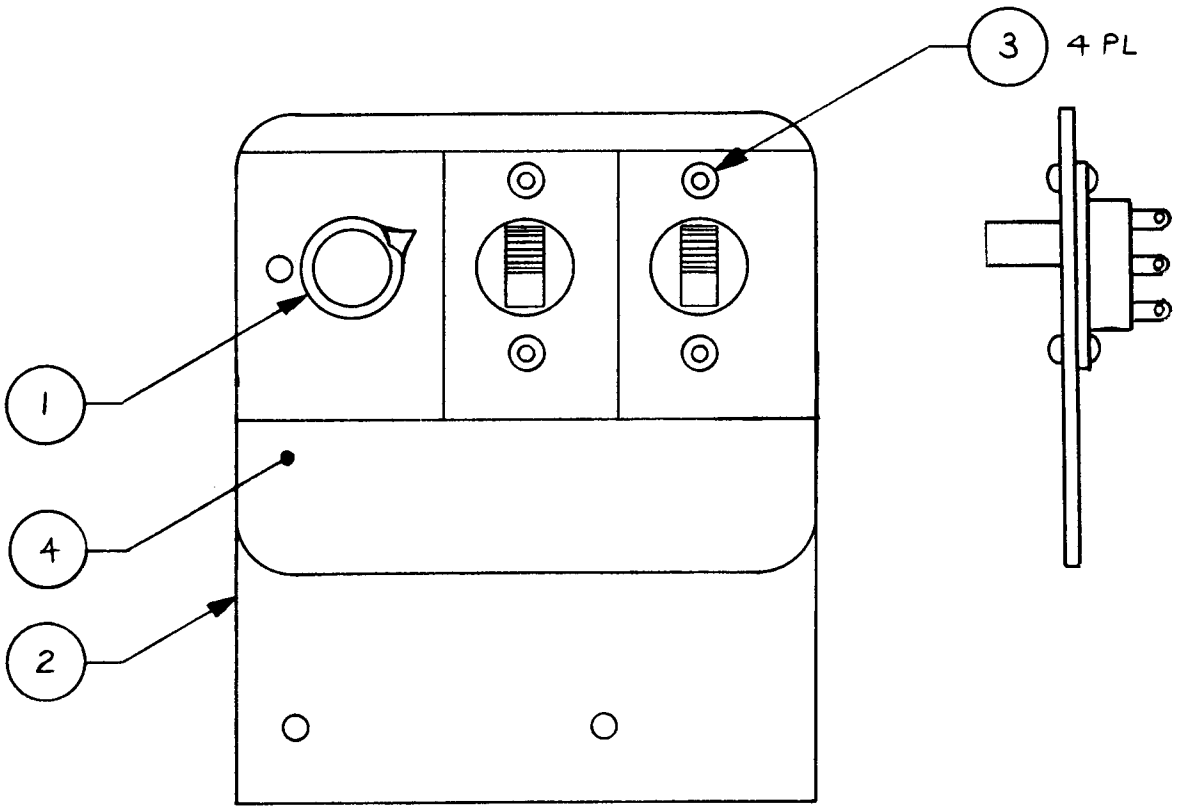

## Volume Control Block Assembly

800-3282-0

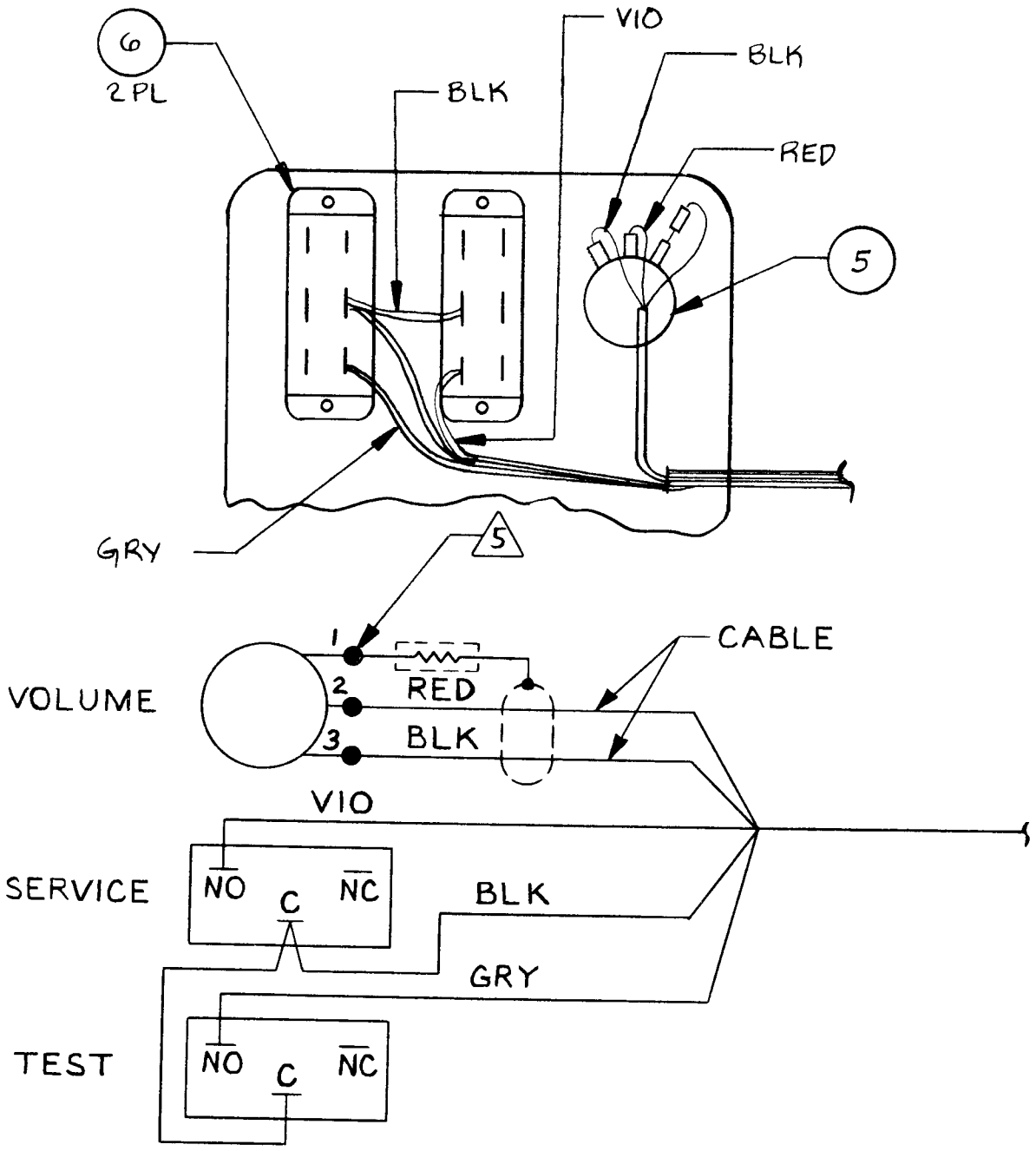

## Volume Control Block Assembly

800-3282-01

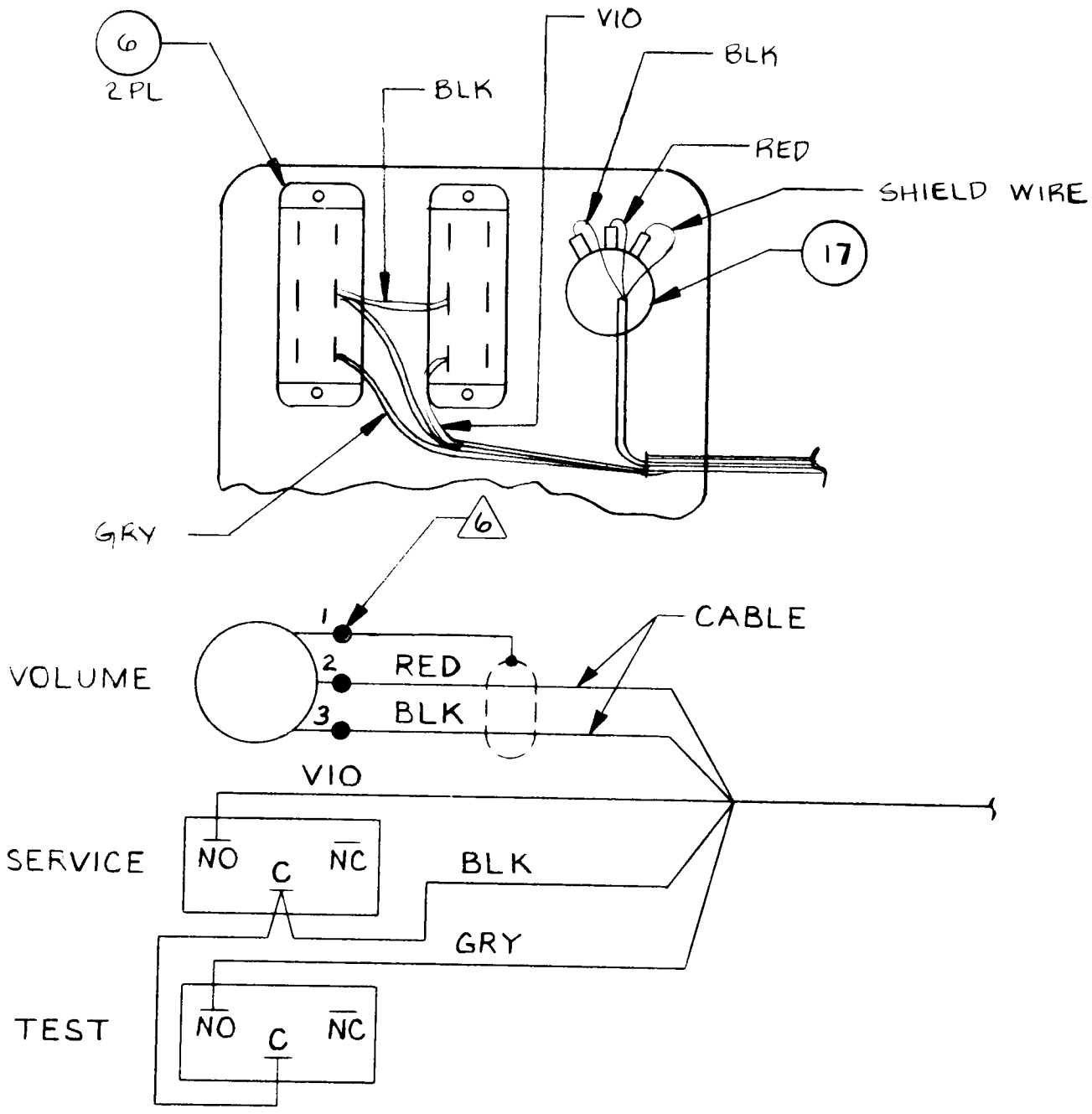

LIGHT AND SPEAKER ASSEMBLY DRAWING NUMBER 800-0415

| ITEM NO. | PART NO. | QTY REQD. | | | DESCRIPTION |
|---|---|---|---|---|---|
| | | -00 | -01 | -02 | |
| 1 | 130-0002-00 | 1 | 1 | 1 | Speaker, Cover |
| 2 | 130-0020-00 | 1 | 1 | 1 | Speaker, 6 x 9, 10W |
| 3 | 252-0213-01 | - | - | 1 | Panel, Speaker and Light |
| 4 | 252-0213-00 | 1 | - | - | Panel, Speaker and Light |
| 5 | 252-0242-00 | - | 1 | - | Panel, Speaker and Light |
| 6 | 281-0014-28 | 4 | 4 | 4 | Screw, 8-32 x 1.75 LG OVH Phil Machine THD Black |
| 7 | 282-0005-20 | 2 | 2 | 2 | Bolt 10-24 x 1.25 LG CRG HD Machine THD BLACK |
| 8 | 283-0072-13 | 4 | 4 | 4 | Nut 8-32 Hex, Machine THD |
| 9 | 283-0072-15 | 2 | 2 | 2 | Nut 10-24 Hex, Machine THD |
| 10 | 283-0060-21 | 4 | 4 | 4 | Washer, #8 Flat, Steel |
| 11 | 283-0060-24 | 2 | 2 | 2 | Washer, #10 Flat, Steel |
| 12 | 283-0061-05 | 4 | 4 | 4 | Washer, #8 Lock, Split, Steel |
| 13 | 283-0061-06 | 2 | 2 | 2 | Washer, #10 Lock, Split, Steel |
| 14 | | | | | |
| 15 | 390-0019-00 | 1 | 1 | 1 | Lamp Fluorescent |
| 16 | 800-0147-02 | - | 1 | - | Fluorescent Lamp Assy |
| 17 | 800-0147-03 | 1 | - | - | Fluorescent Lamp Assy |
| 18 | 800-0371-00 | 1 | - | - | Speaker Harness Assy |
| 19 | 800-0412-00 | - | 1 | - | Speaker Harness Assy |
| 20 | 800-0147-05 | - | - | 1 | Fluorescent Lamp Assy |
| 21 | 800-0403-01 | - | - | 1 | Speaker Harness Assy |

## Light and Speaker Assembly

800-0415

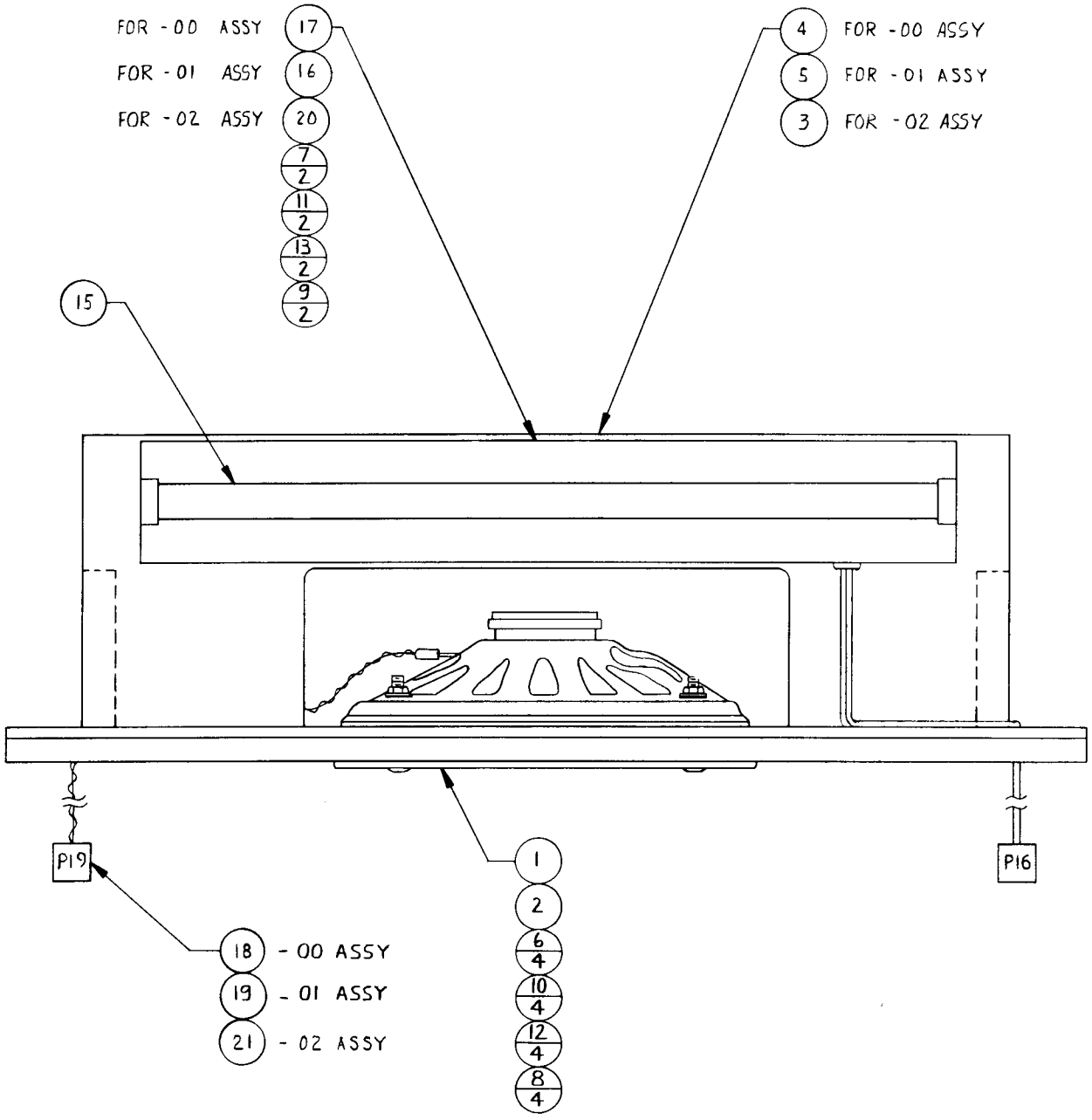

FLUORESCENT LAMP 2 ASSEMBLY DRAWING NUMBER 800-0147

| ITEM NO. | PART NO. | QTY REQD. | | | | | | DESCRIPTION |
|---|---|---|---|---|---|---|---|---|
| | | -00 | -01 | -02 | -03 | -04 | -05 | |
| 1 | 211-0041-00 | 2 | 2 | 2 | 2 | 2 | 2 | Conn Pin Amp |
| 2 | 211-0044-00 | 1 | 1 | 1 | 1 | 1 | 1 | Conn Cap Amp 2 Pin |
| 3 | | | | | | | | |
| 4 | 211-0166-00 | 1 | - | - | - | - | - | Conn Crimp Ring #10 |
| 5 | | | | | | | | |
| 6 | 280-0361-00 | - | 1 | 1 | 1 | 1 | 1 | Bushing Strain Rel, AC Cord |
| 7 | 280-0362-00 | - | 2 | 2 | 2 | 2 | 2 | Elec Crimp Sleeve 24-18 AWG |
| 8 | | | | | | | | |
| 9 | 281-0002-06 | 1 | 1 | 1 | 1 | 1 | 1 | Screw, #6-32 x .375 PAN HD, Phil, Mach THD |
| 10 | | | | | | | | |
| 11 | | | | | | | | |
| 12 | | | | | | | | |
| 13 | | | | | | | | |
| 14 | 283-0060-19 | - | 1 | 1 | 1 | 1 | 1 | Washer #6 Flat, Steel |
| 15 | | | | | | | | |
| 16 | | | | | | | | |
| 17 | 390-0083-00 | 1 | - | - | - | - | - | Fluorescent Lamp Fixt. 18" |
| 18 | 390-0117-00 | - | 1 | 1 | 1 | 1 | 1 | Fluorescent Lamp Fixt. 18"UL |
| 19 | | | | | | | | |
| 20 | | | | | | | | |
| 21 | | | | | | | | |
| 22 | | | | | | | | |
| 23 | 600-0079-00 | - | 5.9' | 7.6' | 4.0' | 4.4' | 6.75' | CA 2 Cond Zip Cord |

## Flourescent Lamp 2 Assembly

800-0147

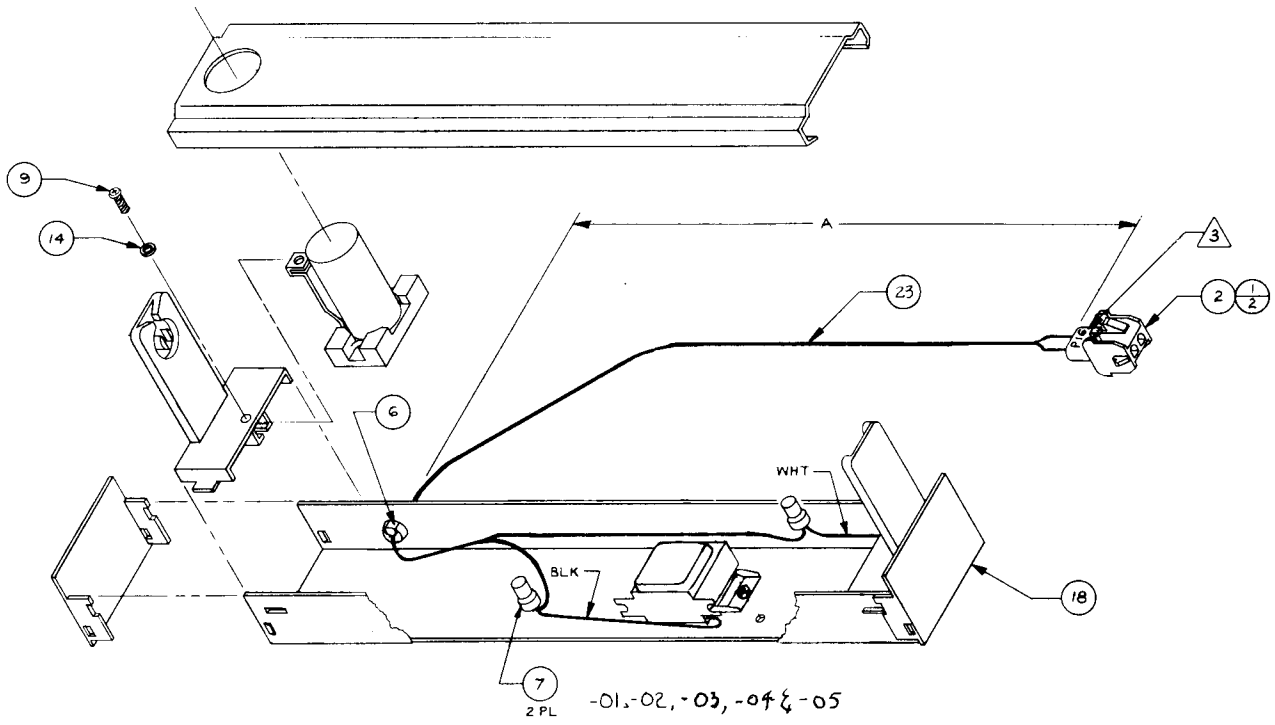

COIN SYSTEM ASSEMBLY DRAWING NUMBER 800-3294

| ITEM NO. | PART NO. | QTY REQD. -00 | -01 | -02 | DESCRIPTION |
|---|---|---|---|---|---|
| 1 | 220-0212-00 | 1 | 1 | 1 | Lock Panel 4-Way |
| 2 | 220-0265-00 | 1 | 1 | - | Coin Mech - Double Frame, Mini-Door |
| 3 | 285-0001-04 | 2 | 2 | 2 | Rivet, .125 Dia x .250 LG, MDRL Pull, AL |
| 4 | 800-3282-00 | 1 | - | - | Volume Control Block Assy |
| 5 | 800-3282-01 | - | 1 | - | Volume Control Block Assy |
| 6 | 800-3282-02 | - | - | 1 | Volume Control Block Assy |
| 7 | 220-0265-01 | - | - | 1 | Coin Mech - Double Frame, Mini-Door |

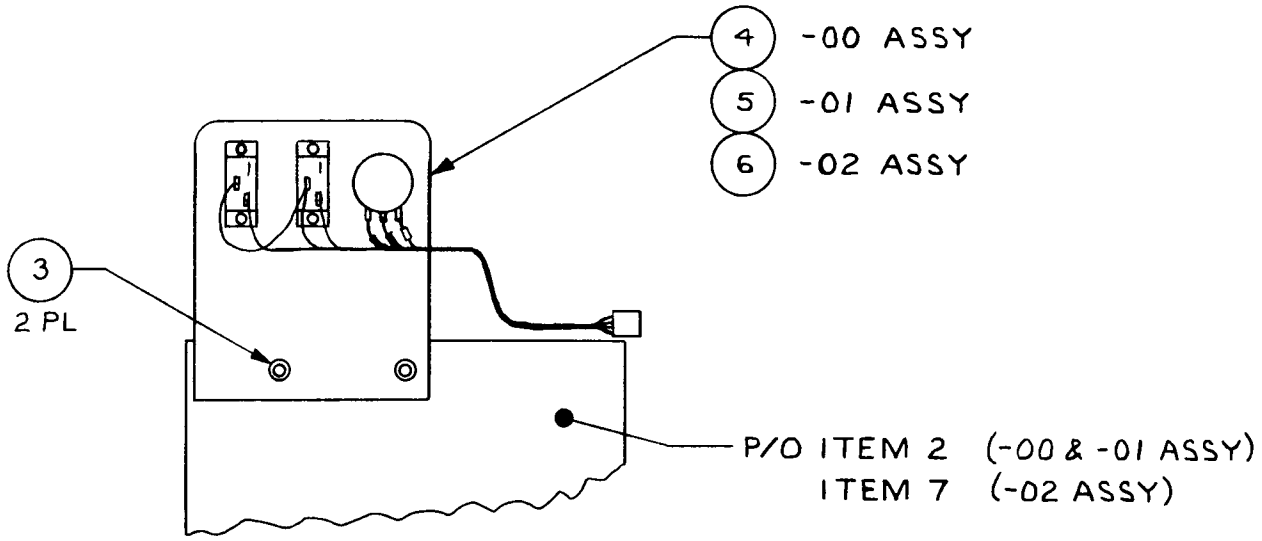


REAR VIEW OF
COIN ENCLOSURE

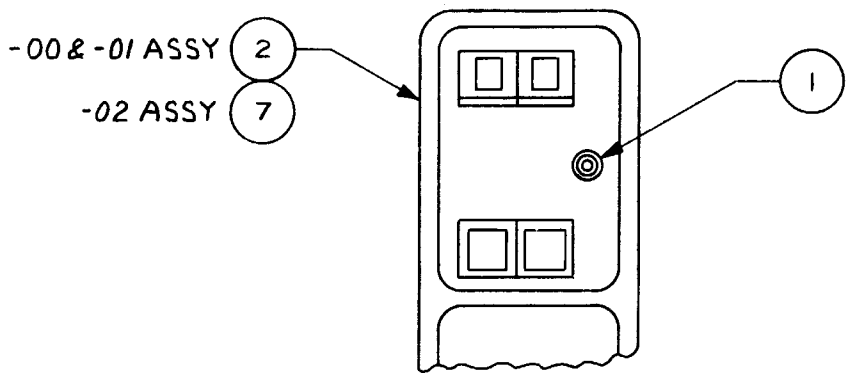


FRONT VIEW

CONTROL PANEL ASSEMBLY DRAWING NUMBER 800-3302

| ITEM NO. | PART NO. | QTY REQD. | DESCRIPTION |
|---|---|---|---|
| 1 | 240-0006-00 | 1 | Button, Plunger, Red |
| 2 | 240-0007-00 | 2 | Button, Plunger, Black |
| 3 | 240-0009-00 | 1 | Button, Plunger, Yellow |
| 4 | 240-0109-00 | 1 | Button, Plunger, Orange |
| 5 | 240-0111-00 | 1 | Button, Plunger, Blue |
| 6 | | | |
| 7 | 250-0565-00 | 1 | Control Knob |
| 8 | 250-0616-00 | 1 | Control Panel |
| 9 | 253-0312-00 | 1 | Control Panel Graphic |
| 10 | | | |
| 11 | 280-0005-00 | 8 | Cable Tie |
| 12 | 280-0327-00 | 2 | Base Tie Wrap |
| 13 | 280-0329-00 | 6 | ½in. - 13 Hex Pal Nut |
| 14 | 280-0465-00 | 4 | Spacer .140 ID x .250 OD X .250 LG Nylon |
| 15 | | | |
| 16 | 281-0002-10 | 4 | Screw 6-32 x .625 LG PNH Phil, Machine THD |
| 17 | 282-0005-12 | 4 | Bolt 10-24 x .750 LG CRG HD, Machine THD Black |
| 18 | | | |
| 19 | 283-0070-03 | 4 | Nut 10-24 Hex, Self Locking, Machine THD |
| 20 | 283-0060-18 | 4 | Washer #6 Flat, Steel |
| 21 | 283-0060-24 | 4 | Washer #10 Flat, Steel |
| 22 | 283-0061-06 | 4 | Washer #10 Lock, Split, Steel |
| 23 | | | |
| 24 | 289-0001-12 | 1 | Pin .099 Dia x .750 LG, Roll, Spring Steel |
| 25 | | | |
| 26 | 510-0064-00 | 6 | Switch, Push Button, Metal, Panel |
| 27 | | | |
| 28 | 800-0374-00 | 1 | Single Player Control Panel Interface Assy |
| 29 | 800-0390-00 | 1 | Rotary Control Assy |
| 30 | 800-3303-00 | 1 | Control Panel Harness Assy |

# Control Panel Assembly

800-3302

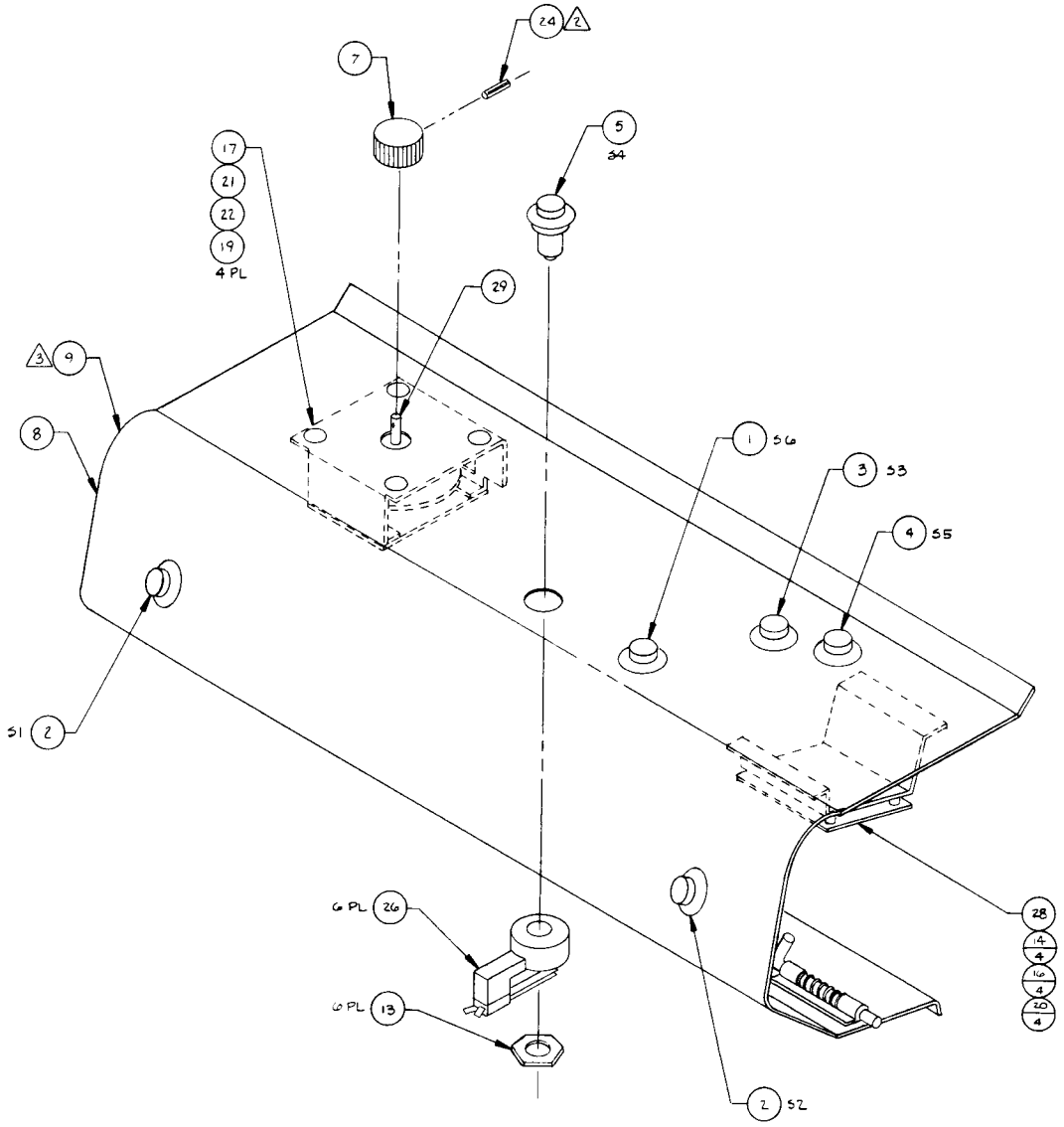


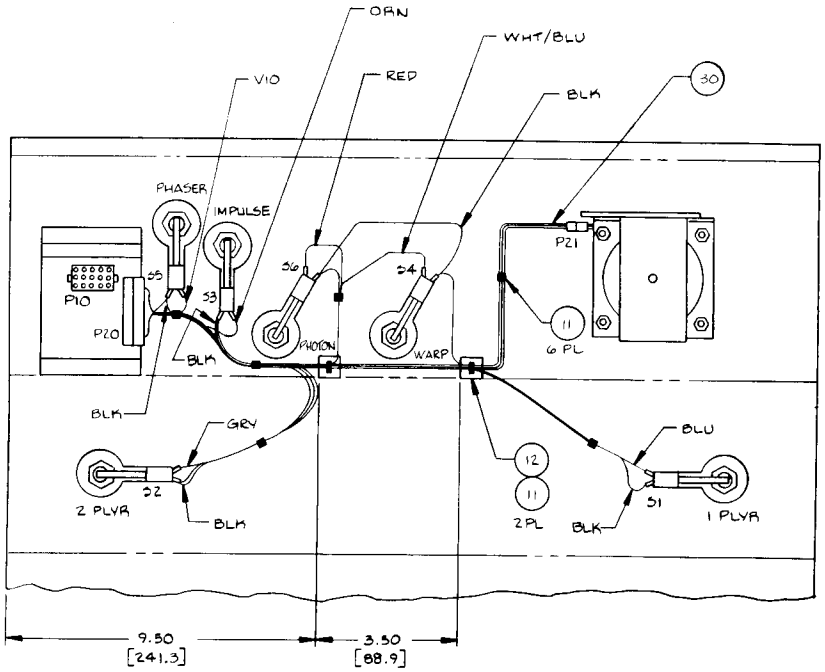


REAR VIEW

ROTARY CONTROL ASSEMBLY DRAWING NUMBER 800-0390

| ITEM NO. | PART NO. | QTY REQD. | DESCRIPTION |
|---|---|---|---|
| 1 | 281-0031-04 | 2 | Scr #4-40 X 1/4" PN HD Thd Forming |
| 2 | 284-0011-05 | 2 | Wshr #4 Fl, SM OD, Stl |
| 3 | 800-0382 | 1 | Rotary Interface Assy |
| 4 | 800-0383 | 1 | Rotary Bracket Assy |

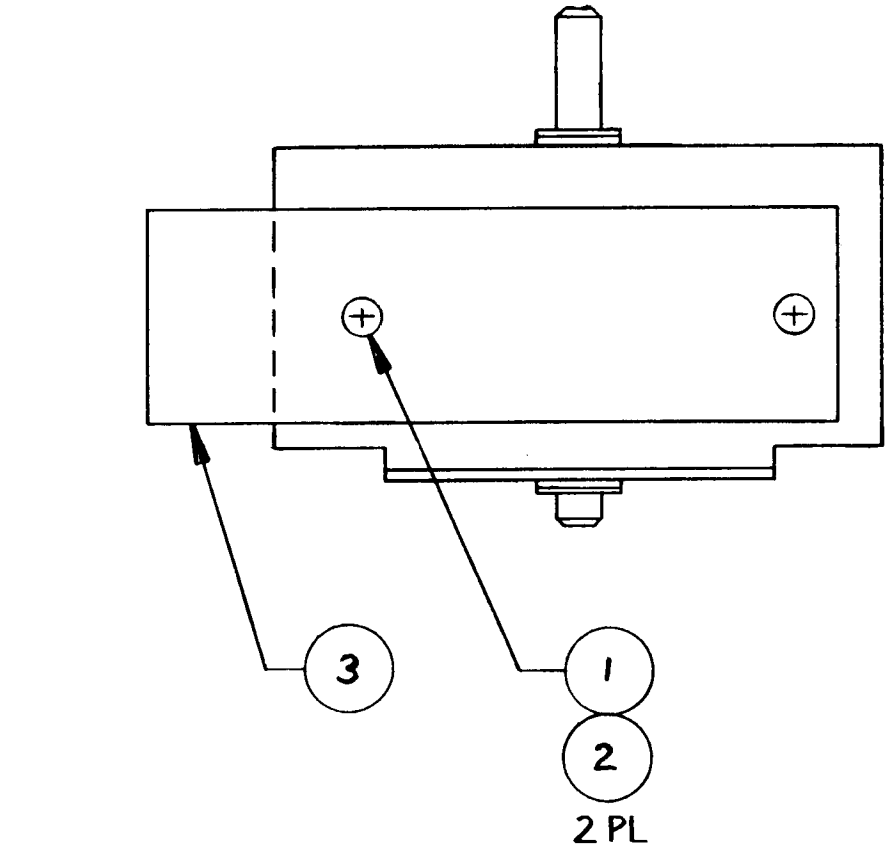
3
1
2
2 PL

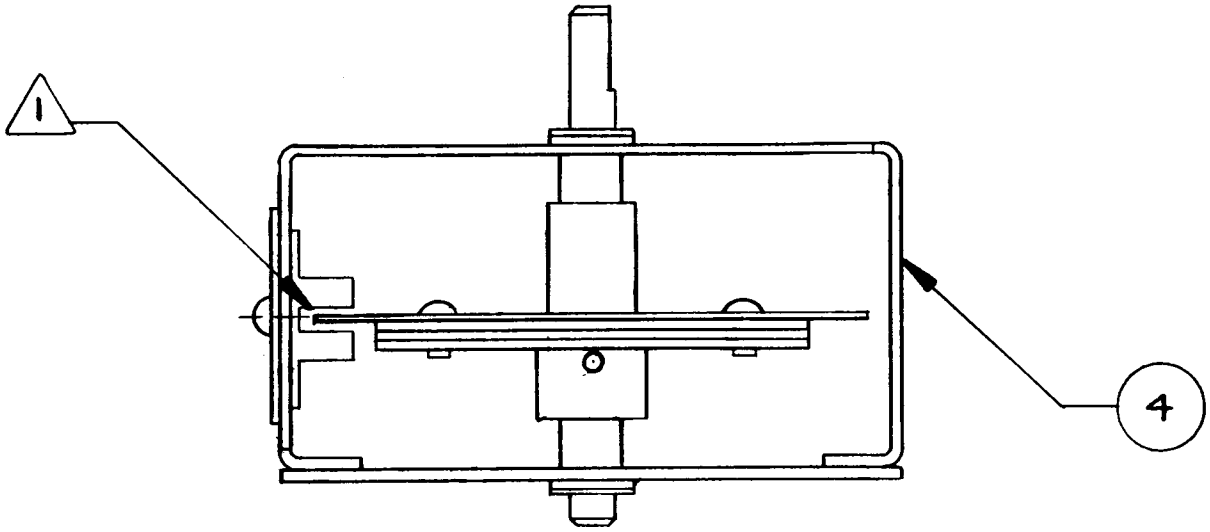
1
4

SINGLE PLAYER CONTROL PANEL INTERFACE ASSEMBLY DRAWING NUMBER 800-0374

| ITEM NO. REF DES. | PART NO. | QTY REQD. | DESCRIPTION | |
|---|---|---|---|---|
| 1 | 150-0088 | 1 | Cap E 10 uf 25V RDL | C3 |
| 2 | 151-0058 | 2 | Cap .01 uf 16V AX | C1, C2 |
| 3 | 151-0059 | 1 | Cap .001 16V AX | C4 |
| 4 | 170-0258 | 1 | PC Board | |
| 5 | 212-0024 | 1 | Conn 12 Pin M RTA PLRZD | P30 |
| 6 | 212-0156 | 1 | Conn Header 15 Pin | P10 |
| 7 | 314-0055 | 2 | IC 74LS244 | U2, U3 |
| 8 | 314-0062 | 1 | IC 74LS74 | U5 |
| 9 | 314-0075 | 1 | IC 74LS39 | U1 |
| 10 | 314-0085 | 1 | IC 74LS14 | U4 |
| 11 | 471-0102 | 3 | Res 1K Ohm 1/2W 5% | R1-R3 |

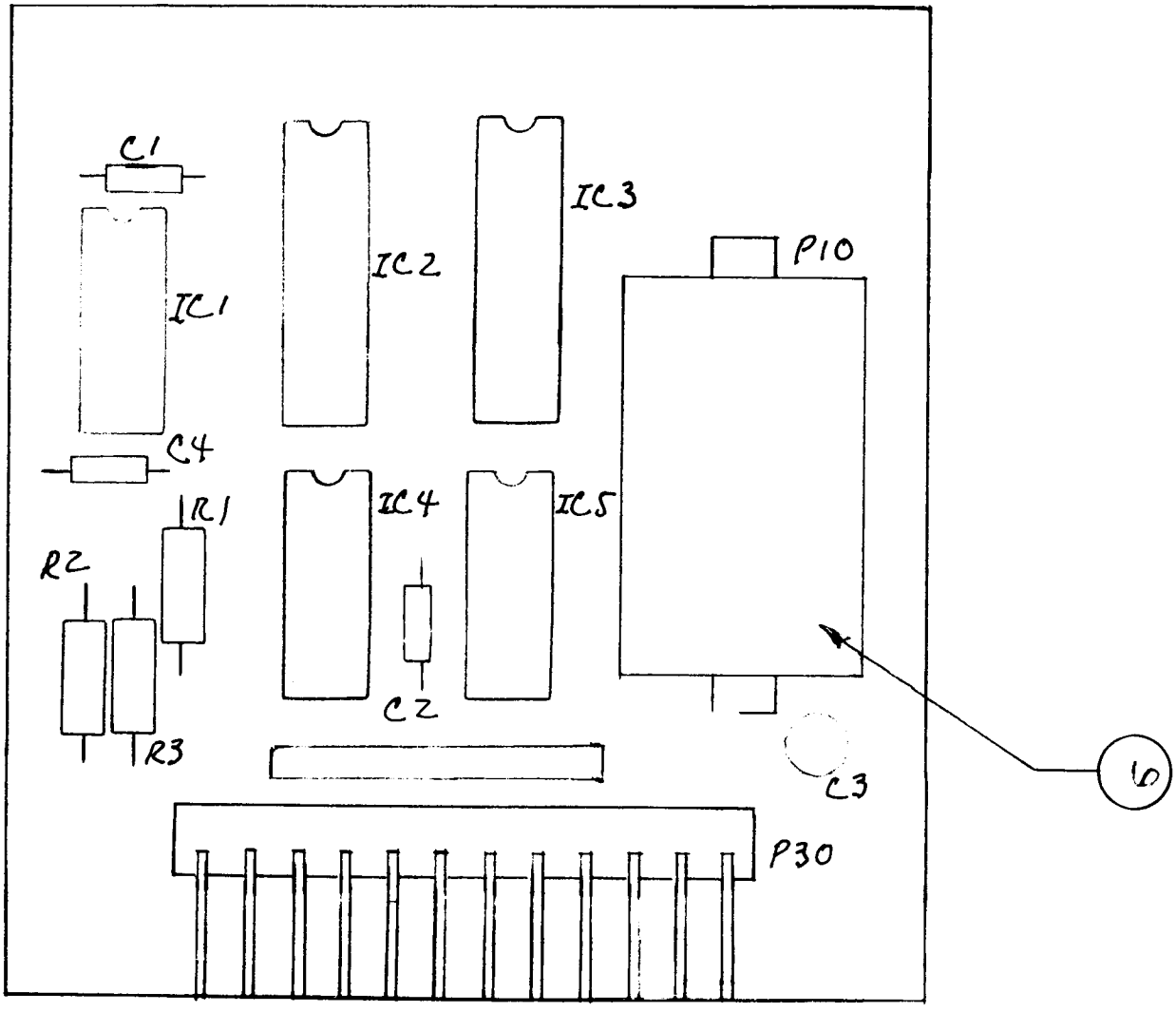
C1
IC1
IC2
IC3
P10
C4
R1
R2
IC4
IC5
C2
R3
C3
P30
10

ROTARY ASSEMBLY INTERFACE DRAWING NUMBER 800-0382

| ITEM NO. | PART NO. | QTY REQD. | DESCRIPTION | REF DES. |
|---|---|---|---|---|
| 1 | 170-0160 | 1 | PC Board | |
| 2 | 212-0081 | 1 | Conn M 4 Pin RTA PLRZD | P1 |
| 3 | 285-0001-04 | 4 | Rivet .125 Dia X .25 Lg | |
| 4 | 370-0006 | 2 | Opto Electric Encoder XSTR | DS1, DS2 |
| 5 | 470-0101 | 1 | Res 100 Ohm 1/4W 5% | R1 |

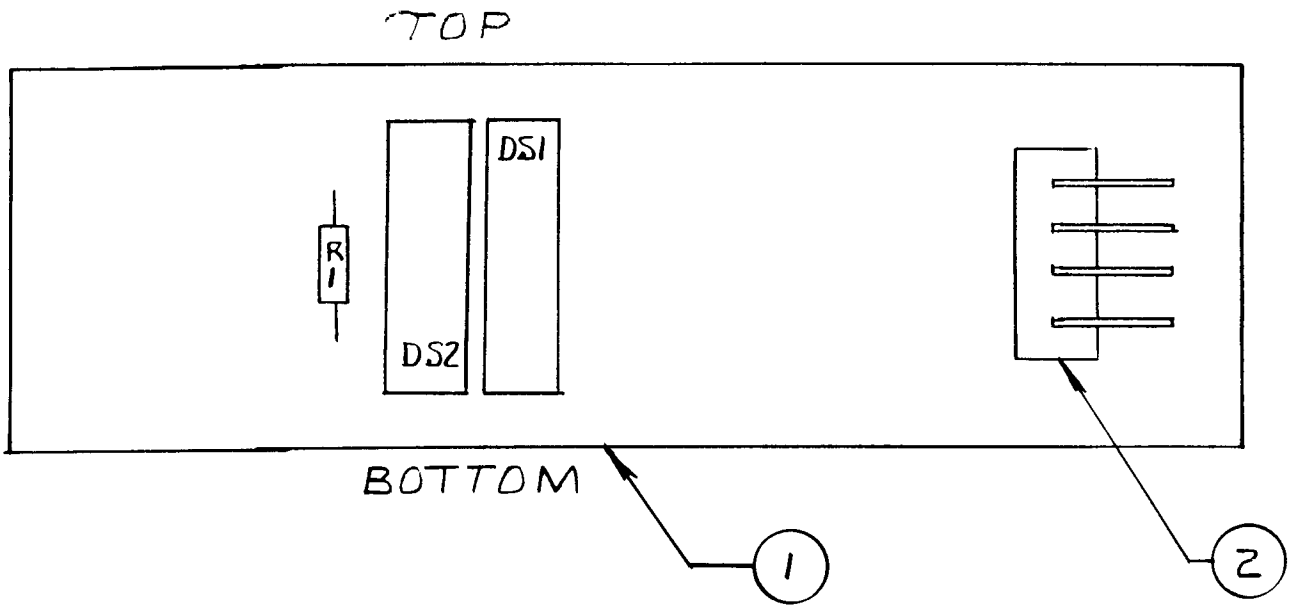


| DEVICE NUMBER | ORIENTATION MARK | LOCATION |
|---|---|---|
| H21A2 | NOTCH | FACING BOTTOM |
| H21A3 | NOTCH | FACING BOTTOM |
| K-2133 | DOT | FACING TOP |
| K-2133A | DOT | FACING TOP |

COLOR MONITOR ASSEMBLY DRAWING NUMBER 800-0375

| ITEM NO. | PART NO. | QTY REQD. | DESCRIPTION |
|---|---|---|---|
| 1 | 200-0025-00 | 1 | X-Y Color Monitor, 19" |
| 2 | 211-0059-00 | 1 | Conn Plug 3 Pin Amp |
| 3 | | | |
| 4 | 252-0175-00 | 1 | Monitor Mounting Board |
| 5 | 282-0017-24 | 4 | Hex HD Bolt, $\frac{1}{4}$ - 20 x 1.500 LG |
| 6 | 283-0060-34 | 8 | Washer, Flat $\frac{1}{4}$ - 1.250 LG O.D. Fender |
| 7 | 283-0070-05 | 4 | Nut, $\frac{1}{4}$ - 20 Hex Self-locking, Mach THD |

## Color Monitor Assembly

800-0375

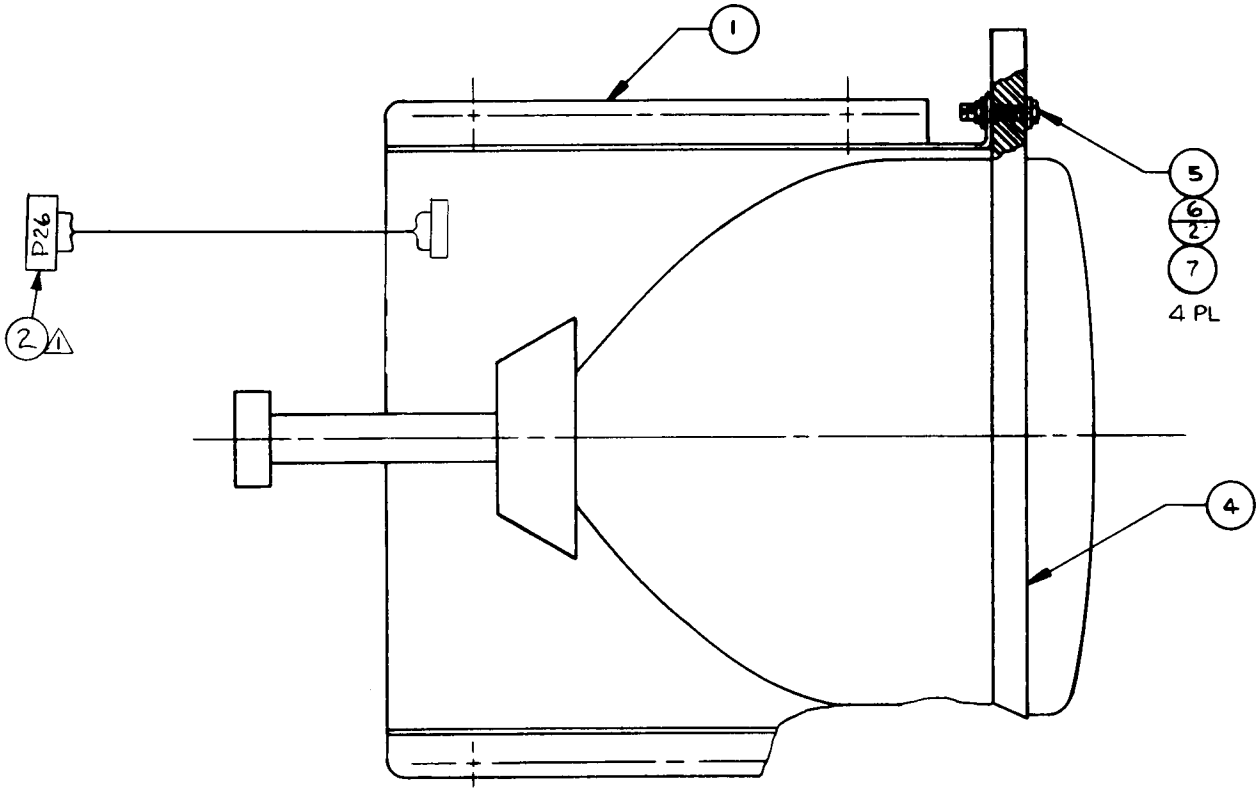

| PART NO. | DESCRIPTION | RES. DES. |
|---|---|---|
| EHT SUPPLY ASSEMBLY | | |
| SEMI-CONDUCTORS | | |
| 315-0118 | EHT Control Circuit | IC900 |
| 481-0211 | Zener Diode | ZD903, 904 |
| 481-0207 | Rectifier 1A 1400V | D901 |
| 482-0062 | Transistor 3906 | Q901 |
| 482-0244 | Transistor MPSU07 | Q902 |
| 482-0030 | Transistor 3904 | Q903 |
| TRANSFORMERS | | |
| 560-0062 | Horiz. Buffer Trans. | T900 |
| 560-0073 | Horiz. Output Trans. | T901 |
| COILS | | |
| 180-0010 | Horiz. Delay Choke | L900 |
| CAPACITORS | | |
| 150-0007 | 4.7 uf 16V | C900 |
| 152-0053 | 0.22 uf 50V | C902 |
| 151-0109 | 2000 uf 50V | C903 |
| 150-0015 | 22 uf 16V | C904 |
| 151-0110 | 0.1 uf 100V | C906, 912 |
| 150-0222 | 0.022 uf 100V | C907 |
| 150-0010 | 100 uf 16V | C911 |
| 150-0221 | High Current Cap | C914, 915 |
| 151-0113 | 47 uf 160V | C916 |
| 152-0027 | 0.047 uf 100V | C918 |
| RESISTORS | | |
| 470-0103 | 10K 1/4W 5% | R900, 901, 906 |
| 460-0008 | 47K 1/4W 5% | R902 |
| 470-0154 | 150K 1/4W 5% | R904, 916, 934 |
| 470-0123 | 12K 1/4W 5% | R905, 915 |
| 471-0472 | 4.7K 1/4W 5% | R907, 938, 939 |
| 471-0474 | 470K 1/ W 5% | R910 |
| 460-0016 | 1.2K 1/4W 5% | R914 |

| PART NO. | DESCRIPTION | RES. DES. |
|---|---|---|
| EHT SUPPLY ASSEMBLY CONT'D | | |
| RESISTORS | | |
| 475-0043 | 200 Ohms Control | R917 |
| 475-0044 | 2K Control | R918 |
| 470-0271 | 270 Ohm 1/4W 5% | R923 |
| 470-0471 | 470 Ohm 1/4W 5% | R924 |
| 471-0240 | 24 Ohm 1/2W 5% | R925 |
| 470-0330 | 33 Ohm 1/4W 5% | R927 |
| 470-0680 | 68 Ohm 1/4W 5% | R930 |
| 462-0001 | 68 Ohm 1W 5% | R932 |
| 464-0114 | 470K Control | R933 |
| 470-0333 | 33K 1/4W 5% | R935 |
| 470-0274 | 270K 1/4W 5% | R936 |
| 471-0475 | 4.7M 1/2W 5% | R937 |
| 471-0331 | 330 Ohm 1/2W 10% | R940 |
| 472-0470 | 47 Ohm 1W 5% | R941 |
| 470-0562 | 5.6K 1/4W 5% | R942 |
| EHT SUPPLY ASSEMBLY KIT | | |
| 482-0242 | PWR Transistor 5A 1400V | Q900 |
| 475-0035 | Focus Control | R922 |
| EHT REGULATOR ASSEMBLY | | |
| SEMI-CONDUCTORS | | |
| 482-0268 | 2N 6558 | Q320, 321, 323 |
| 482-0269 | TIP 47 (Motorola) | Q322 |
| 481-0204 | 1N 5263 | ZD340 |
| CAPACITORS | | |
| 152-0149 | 68 pf 500V | C330 |
| 151-0108 | 470 pf 500V | C331 |
| 472-0223 | 22K 1W 5% | R300 |
| 471-0683 | 68K 1/2W 5% | R301 |
| 472-0273 | 27K 1W 5% | R302 |
| 471-0473 | 47K 1/2W 5% | R304 |

| PART NO. | DESCRIPTION | RES. DES. |
|---|---|---|
| EHT REGULATOR ASSEMBLY CONT'D | | |
| RESISTORS | | |
| 470-0331 | 330 Ohm 1/4W 5% | R305 |
| 471-03R3 | 3.3 Ohm 1/2W 5% | R306 |
| 470-0363 | 36K 1/4W 5% | R307 |
| 460-0008 | 47K 1/4W 5% | R308 |
| 475-0048 | 10K Control Pot. | R310 |
| DEFLECTION AMP PCB ASSEMBLY | | |
| SEMI-CONDUCTORS | | |
| 315-0117 | Input Amplifier IC | IC600 |
| 481-0202 | Rectifier | D400-403 |
| 481-0020 | Rectifier 1A 200V | D404-407, 409, D408, 601-605 701-705 |
| 481-0006 | Diode 1N 914 | |
| 481-0204 | Zener Diode 1N 5263B 1/2W 56V | ZD400 |
| 481-0205 | Zener Diode 1N 5239B 1/2W 9.1V | ZD401 |
| 481-0179 | Zener Diode 9.1V 1W 5% (Motorola) | ZD402 (1N4739) |
| 482-0248 | Transistor TIB 29B | Q400, 401 |
| 482-0244 | Transistor MPSU60 (Motorola) | Q600, 700 |
| 482-0245 | Transistor 300V 1/2A | Q601, 604, 701, 704 |
| 482-0243 | Transistor MPSU10 (Motorola) | Q602, 603, 702, 704 |
| CAPACTORS | | |
| 150-0211 | 100 uf 80V | C401 |
| 150-0212 | 680 uf 160V | C402 |
| 150-0213 | 6800 uf 80V | C403, 404 |
| 150-0004 | 10 uf 25V | C405 |
| 151-0046 | Ceramic 0.1 uf | C407, 621, 721 |
| 152-0056 | 0.1 uf 200V | C410 |
| 150-0220 | 22 uf 250V | C411 |

| PART NO. | DESCRIPTION | RES. DES. |
|---|---|---|
| DEFLECTION AMP PCB ASSEMBLY CONT'D | | |
| CAPACITORS | | |
| 152-0145 | 2.2 pf 500V | C600 |
| 152-0146 | 12 pf 500V | C603, 703 |
| 152-0147 | 100 pf 10% 500V | C620, 720 |
| 152-0023 | 47 pf 10% 500V | C622, 722 |
| 151-0107 | 0.068 uf 200V | C624, 724 |
| 152-0149 | 5.6 pf 10% | C702 |
| 152-0150 | 560 pf 500V 20% | C725 |
| RESISTORS | | |
| 478-0006 | Thermistor 120V 60 Ohm | R400 |
| 473-0330 | 33 Ohm 4W 10% | R401 |
| 472-0223 | 22K 1W 10% | R402 |
| 470-0222 | 2.2K 1/4W 5% | R403 |
| 474-0220 | 220 Ohm 10W | R404 |
| 471-0822 | 8.2 1/2W 5% | R405 |
| 474-0680 | 680 Ohm 6W | R406 |
| 470-0472 | 4.7K 1/4W 5% | R410 |
| 470-0275 | 2.7M 1/4W 5% | R411 |
| 470-0155 | 1.5M 1/4W 5% | R412 |
| 470-0621 | 620 Ohm 1/4W 5% | R600 |
| 471-0911 | 910 Ohm 1/4W 5% | R601 |
| 470-0103 | 10K 1/4W 5% | R602 |
| 470-0182 | 1.8K 1/4W 5% | R603, 624, 724 |
| 470-0303 | 30K 1/4W 5% | R604 |
| 475-0037 | 50K Trim Pot | R605 |
| 470-0104 | 100K 1/4W 5% | R606 |
| 470-0242 | 2.4K 1/4W 5% | R607, 710 |
| 470-0102 | 1K 1/4W 5% | R608, 636, 637, 715, 736, 737 |
| 475-0038 | 1K Trim Pot | R611 |
| 470-0183 | 18K 1/4W 5% | R620, 720 |

| PART NO. | DESCRIPTION | RES. DES. |
|---|---|---|
| DEFLECTION AMP PCB ASSEMBLY CONT'D | | |
| RESISTORS | | |
| 470-0622 | 6.2K 1/4W 5% | R621, 721 |
| 470-0181 | 180 Ohm 1/4W 5% | R622, 625, 631, 722, 725, 731 |
| 470-0223 | 22K 1/4W 5% | R623, 704, 705, 723 |
| 470-0101 | 100 Ohm 1/4W 5% | R626, 629, 726, 729 |
| 471-0183 | 18K 1/2W 10% | R627, 727 |
| 470-0271 | 270 Ohm 1/4W 5% | R628, 728 |
| 471-0223 | 22K 1/2W 5% | R630, 730 |
| 472-0471 | 470 Ohm 2W 5% | R632 |
| 470-0151 | 150 Ohm 1/4W 5% | R633 |
| 460-0056 | 82 Ohm 1/4W 5% | R634 |
| 474-0150 | 1.5 Ohm 10W | R635 |
| 470-0222 | 2.2K 1/4W 5% | R700, 701 |
| 475-0039 | 5K Trim Pot | R702 |
| 470-0153 | 15K 1/4W 5% | R703, 706 |
| 470-0152 | 1.5K 1/4W 5% | R714 |
| 472-0391 | 390 Ohm 2W 5% | R732 |
| 470-0475 | 4.7M Trim Pot | R930, 931 |
| CRT SOCKET PCB ASSEMBLY | | |
| SEMI-CONDUCTORS | | |
| 482-0243 | Transistor MPS u10 (Motorola) | Q100-105 |
| LAMPS | | |
| 390-0107 | Lamp | NE100-103 |
| CAPACITORS | | |
| 151-0067 | 100 pf 500V | C100, 110, 130 |
| 151-0112 | 0.1 uf 200V | C101 |
| 151-0050 | 0.01 uf 500V 10% | C102, 111, 131 |
| 151-0096 | 0.01 uf 1000V | C112, 113 |

| PART NO. | DESCRIPTION | RES. DES. |
|---|---|---|
| RESISTORS | | |
| 470-0101 | 100 Ohm 1/4W 5% | R101, 112, 130 |
| 470-0275 | 2.7K 1/4W 5% | R102, 113, 131 |
| 462-0056 | 3.3K 1W 5% | R103, 114, 132 |
| 472-0471 | 470 Ohm 1/4W 5% | R104, 115 |
| 470-0122 | 1.2K 1/4W 5% | R105, 116, 134 |
| 475-0041 | 250 Ohm Trim Pot | R106, 117 |
| 475-0042 | 2.5K Trim Pot | R107, 118, 136 |
| 471-0222 | 22K 1/2W 5% | R108, 119, 137 |
| 470-0181 | 180 Ohm 1/4W 5% | R109, 121 |
| 470-0102 | 1K 1/4W 5% | R110 |
| 471-0224 | 220K 1/2W 5% | R122 |
| 471-0102 | 1K 1/2W 5% | R123 |
| 471-0474 | 470K 1/2W 5% | R124 |
| 470-0621 | 620 Ohm 1/4W 5% | R133 |
| HEAT SINK ASSEMBLY | | |
| 482-0260 | 2N 6259 | Q605, 606, 705, 706 |
| 260-0010 | Motor Blower Fan | M01 |
| MISCELLAEOUS | | |
| 200-0040 | CRT | V01 |
| 180-0009 | Deflection Yoke | DY01 |
| 180-0017 | Degaussing Coil | L100 |
| 213-0019 | CRT PCB Socket | J101 |
| 280-0208 | Yoke Wedge | X |
| 800-0307 | Input Limiter PCB | X |
| 800-0319 | Input Clamp PCB | X |

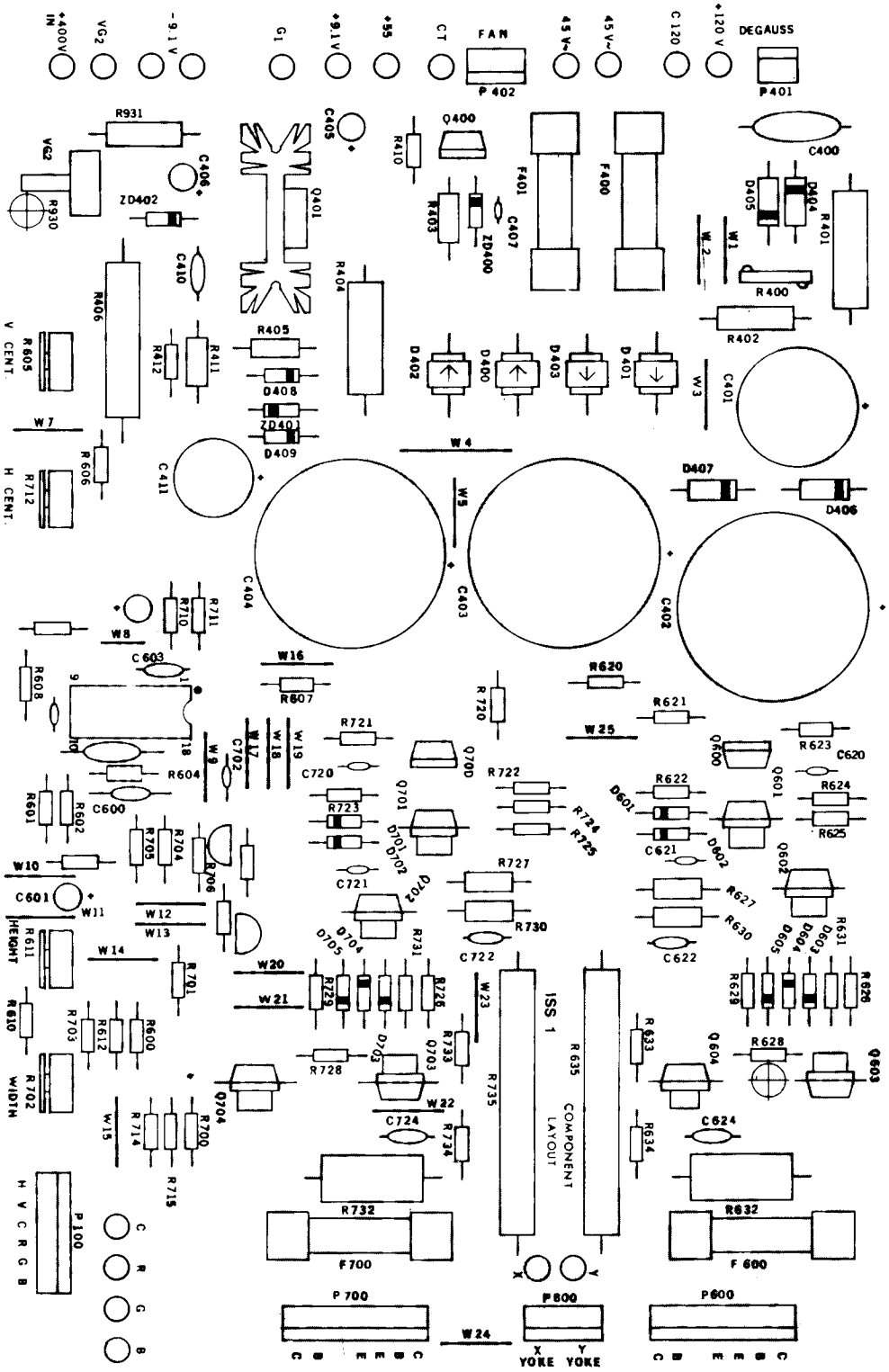


## X-Y P.C.B. COMPONENT LAYOUT

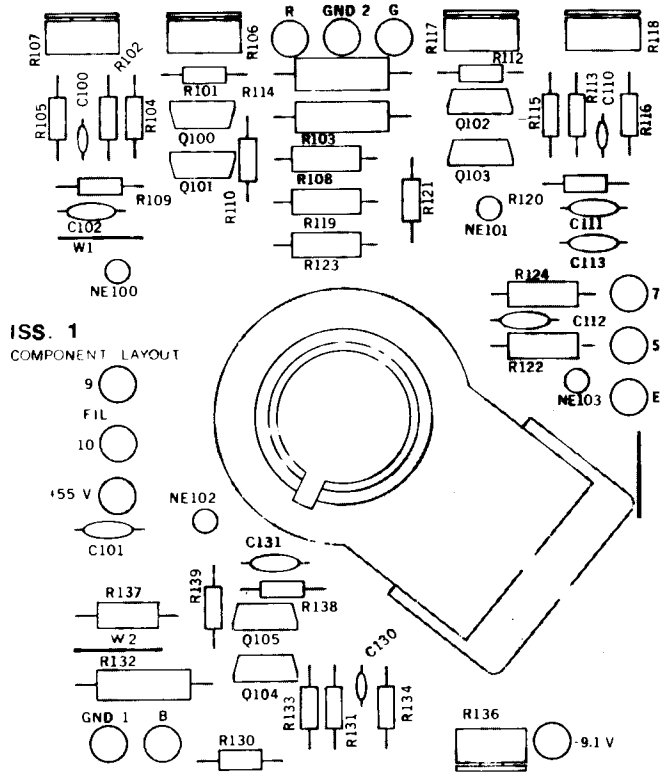


## C.R.T. P.C.B. COMPONENT LAYOUT

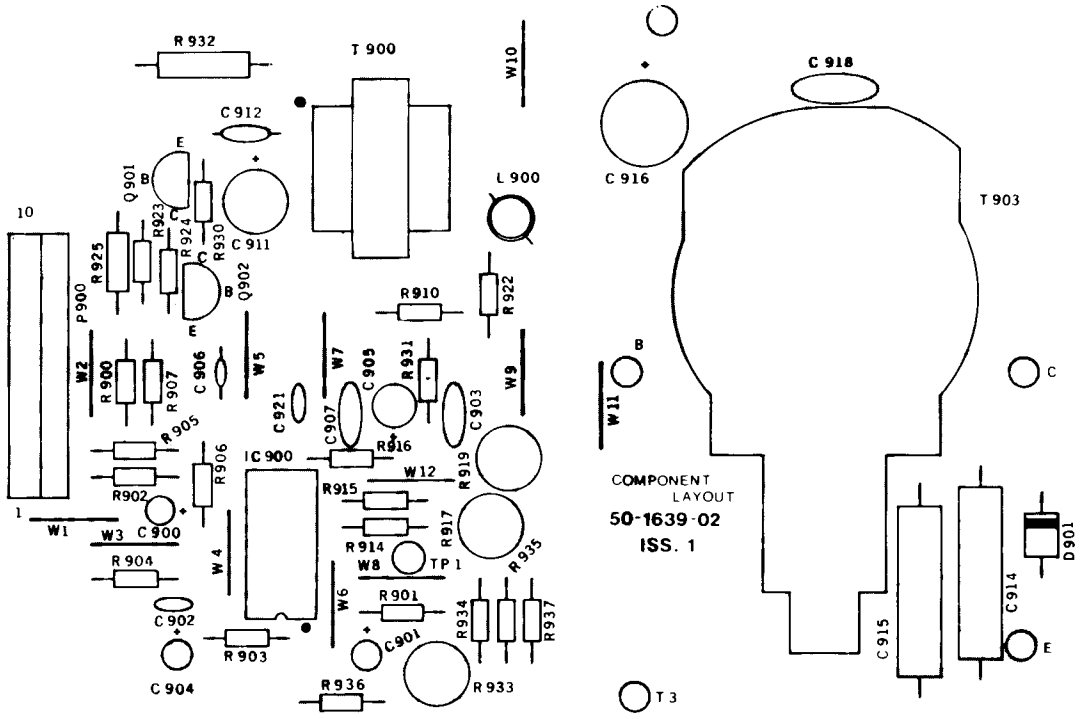


## EHT P.C.B. COMPONENT LAYOUT

COMPONENT SHELF ASSEMBLY DRAWING NUMBER 800-3304

| ITEM NO. | PART NO. | QTY REQD. | DESCRIPTION |
|---|---|---|---|
| 1 | 250-0458-00 | 1 | Saddle G-80 Cage |
| 2 | 252-0142-00 | 1 | Component Shelf UP. CAB. |
| 3 | 280-0324-00 | 1 | Cable Clamp Nylon |
| 4 | 281-0045-12 | 15 | SCR 10-12 x 3/4" PN HD Type A/AB |
| 5 | 284-0016-08 | 15 | Washer Flt #10 Small OD 1/2" |
| 6 | 284-0036-00 | 15 | Washer Lock Split #10 |
| 7 | 280-0005-00 | 5 | Cable Tie |
| 8 | 800-0190-00 | 1 | Assy XFMR EMI |
| 9 | 800-0191-00 | 1 | Assy Game Pwr Supply G-80 |
| 10 | 800-0277-00 | 1 | Assy Volume Control Block |
| 11 | 800-0285-00 | 1 | Assy Harn Gnd Game Elec. |
| 12 | 800-0286-00 | 1 | Assy Harn Gnd Pwr Supply |
| 13 | 800-0314-00 | 1 | Assy Harn Pwr |
| 14 | 800-3305-00 | 1 | Game Elec. Assy |
| 15 | 280-0475-00 | 12 | Staple |

# Component Shelf Assembly

800-3304

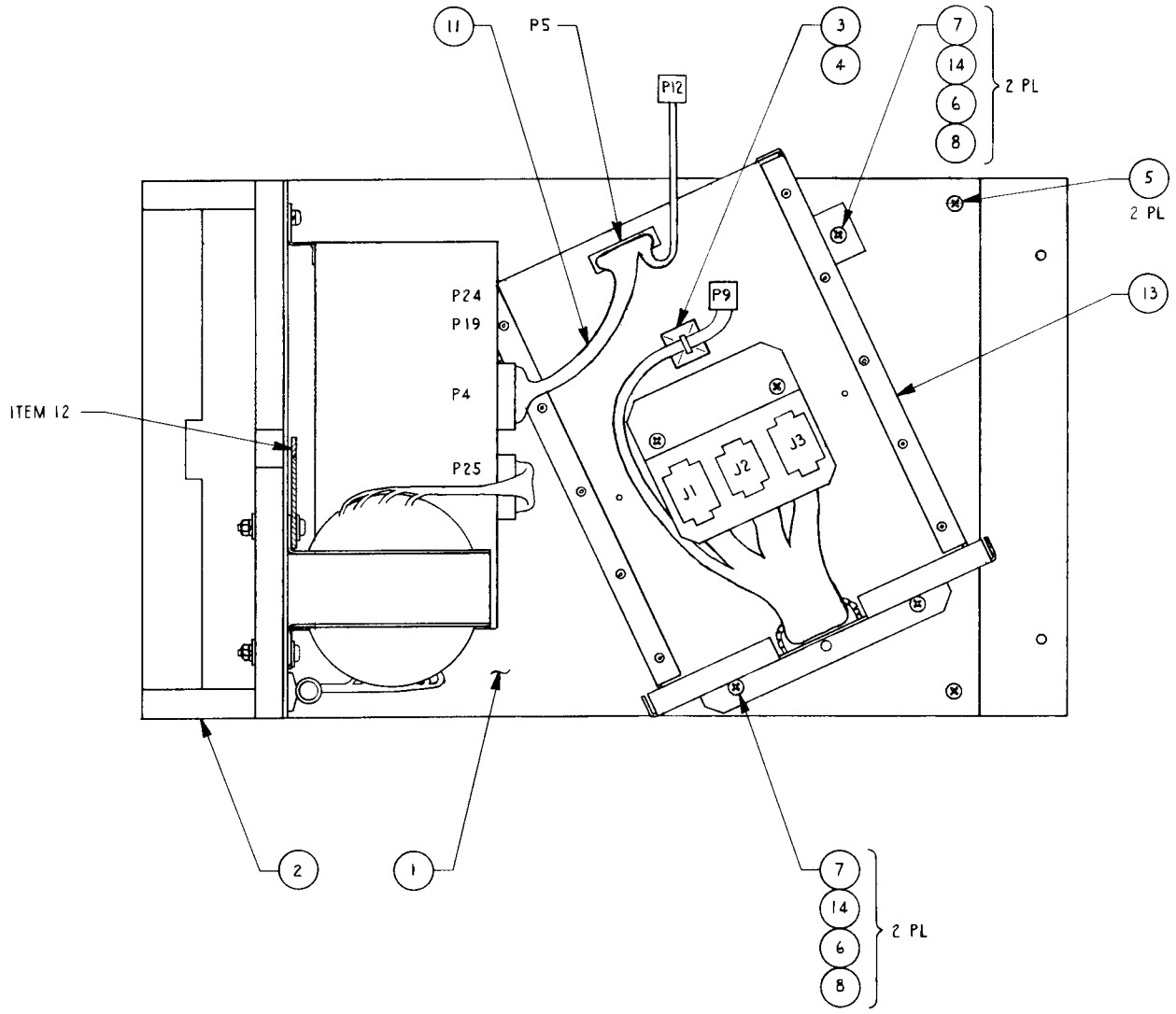

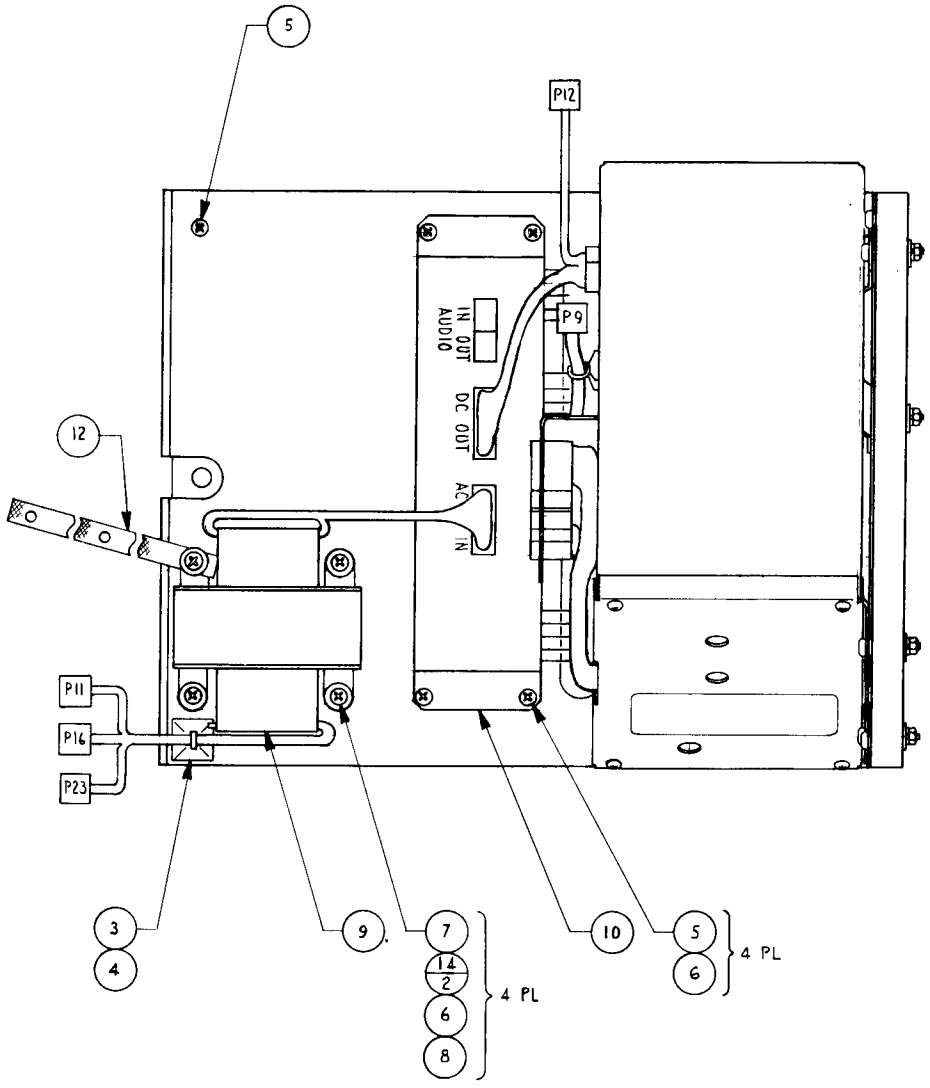
5
P12
IN OUT AUDIO
P9
DC OUT
AC IN
12
P11
P16
P23
3
4
9
7
14
2
6
8
4 PL
10
5
6
4 PL

G-80 CAGE UNIVERSAL ASSEMBLY DRAWING NUMBER 800-0296

| ITEM NO. | PART NO. | QTY REQD. | DESCRIPTION |
|---|---|---|---|
| 1 | 250-0456 | 1 | G-80 Cage Assembly |
| 2 | 250-0499 | 2 | G-80 Cage Bracket |
| 3 | 280-0343 | 1 | Split Grommet |
| 4 | 420-0560 | 1 | Test Button Decal |
| 5 | 800-0105 | 1 | 6-Slot Master Board Assembly |
| 6 | 281-0045-06 | 6 | Pan Head Phillips Screw, Type AB, 10-12 x .375 Lg |
| 7 | 281-0001-12 | 4 | Pan Head Phillips Machine Screw, #4-40 x 3/4 |
| 8 | 281-0001-06 | 4 | Pan Head Phillips Machine Screw, #4-40 x 3/8 |
| 9 | 284-0001-00 | 4 | Flat Washer, #4 |

# G-80 Cage Universal #2 Assembly

800-0296

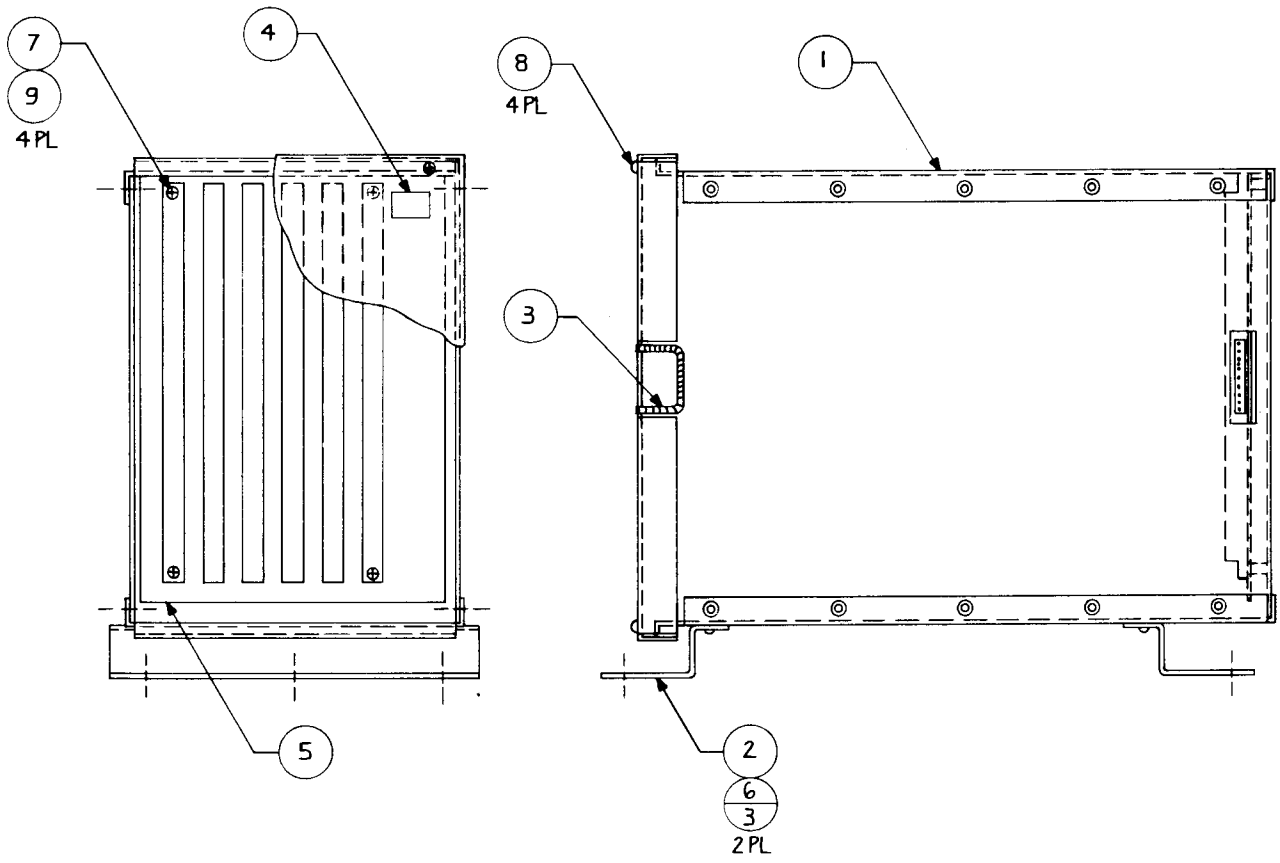

GAME ELECTRONICS DRAWING NUMBER 800-3305

| ITEM NO. | PART NO. | QTY REQD. | DESCRIPTION |
|---|---|---|---|
| 1 | 420-0560-00 | 1 | Decal Test Button |
| 2 | 420-0054-00 | 1 | Decal Electronics |
| 3 | 600-0089-00 | 1 | Cable X-Y Interface |
| 4 | 800-0161-00 | 1 | Assy X-Y Timing PCB |
| 5 | 800-0163-00 | 1 | Assy X-Y Control PCB |
| 6 | 800-0282-00 | 1 | Assy Harn Video X-Y Intf |
| 7 | 800-0296-00 | 1 | Assy G-80 Gage Univ |
| 8 | 800-0378-00 | 1 | CPU Master Harn Assy |
| 9 | 800-3307-00 | 1 | Assy CPU PCB |
| 10 | 800-3306-00 | 1 | Assy 2716 Prom PCB |
| 11 | 800-3270-00 | 1 | Sound Board Assy |
| 12 | 800-0294-00 | 1 | Speech Board Assy-2732 |

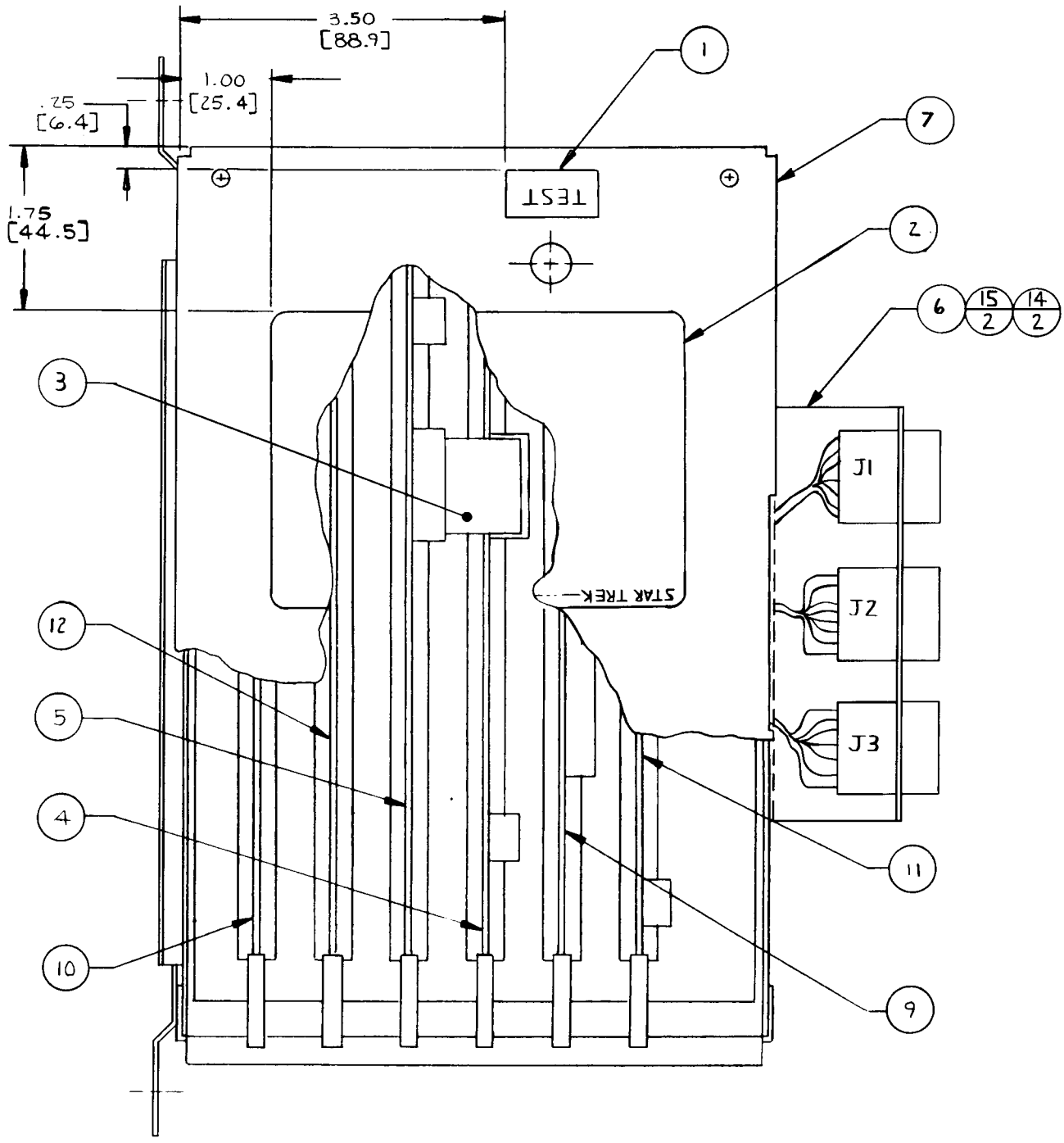
3.50
[88.9]
1.00
[25.4]
.25
[6.4]
1.75
[44.5]
TEST
STAR TREK
J1
J2
J3
1
2
3
4
5
6
7
9
10
11
12
15
2
14
2

CPU BOARD ASSEMBLY DRAWING NUMBER 800-3307

| ITEM NO. | PART NO. | QTY REQD. | DESCRIPTION | REF DES |
|---|---|---|---|---|
| 1 | 800-0107-02 | 1 | CPU Board Assy | |
| 2 | 316-1873-00 | 1 | IC EPROM 2716 | U25 |
| 3 | 315-0064-00 | 1 | Chip 315-0064 | |

CPU BOARD ASSEMBLY DRAWING NUMBER 800-0107

| ITEM NO. | PART NO. | QTY REQD. | DESCRIPTION | REF DES. |
|---|---|---|---|---|
| 1 | 150-0088 | 3 | Cap E 10 uf 25V | C43, C46, C62 |
| 2 | 151-0005 | 1 | Cap CER 680 pf 50V | C50 |
| 3 | 151-0012 | 1 | Cap CER .1 uf 50V | C47 |
| 4 | 151-0020 | 1 | Cap CER 33 pf 50V | C49 |
| 5 | 151-0060 | 21 | Cap CER .1 uf 16V AX | C37-C42, C44, C48, C51-C61, C63, C64 |
| 6 | 151-0061 | 36 | Cap CER 220 pf 16V AX | C1-C36 |
| 7 | 170-0194 | 1 | PC Board | |
| 8 | 211-0008 | 4 | Conn Pin Test PT | TP1-TP4 |
| 9 | 212-0098 | 4 | Conn M 10 Pin RTA | |
| 10 | 230-0013 | 1 | XTAL 8.000 MHZ | Y1 |
| 11 | 314-0001 | 1 | IC NE555 | U12 |
| 12 | 314-0015 | 1 | IC 7404 | U30 |
| 13 | 314-0018 | 4 | IC 74LS00 | U6, U8, U14, U19 |
| 14 | 314-0019 | 1 | IC 74LS04 | U18 |
| 15 | 314-0055 | 3 | IC 74LS244 | U34, U36, U38 |
| 16 | 314-0058 | 1 | IC 74LS08 | U13 |
| 17 | 314-0062 | 5 | IC 74LS74 | U10, U11, U17, U20, U39 |
| 18 | 314-0066 | 1 | IC 74LS27 | U16 |
| 19 | 314-0067 | 1 | IC 74LS30 | U37 |
| 20 | 314-0068 | 2 | IC 74LS32 | U32, U33 |
| 21 | 314-0078 | 1 | IC 74LS 2 | U23 |
| 22 | 314-0083 | 1 | IC 74LS240 | U4 |
| 23 | 314-0085 | 2 | IC 74LS14 | U7, U31 |
| 24 | 314-0087 | 1 | IC 74LS139 | U24 |
| 25 | 314-0093 | 1 | IC 74LS374 | U3 |
| 26 | 314-0099 | 1 | IC 74LS245 | U35 |
| 27 | 314-0105 | 4 | IC 74LS253 | U1, U2, U5, U9 |
| 28 | 315-0041 | 1 | IC Z80A | U22 |
| 29 | 315-0046 | 4 | IC 2114 | U26-U29 |

| ITEM NO. | PART NO. | QTY REQD. | DESCRIPTION | REF DES. |
|---|---|---|---|---|
| 30 | 315-0050 | 1 | IC 2516 (2716) | U25 |
| 31 | 316-0764 | 1 | IC Prom 32x8 | U15 |
| 32 | | | | |
| 33 | 390-0003 | 1 | Led Red | D3 |
| 34 | 471-0101 | 1 | Res 100 Ohm 1/2W 5% | R5 |
| 35 | 471-0102 | 2 | Res 1K Ohm 1/2W 5% | R1, R3 |
| 36 | 471-0103 | 1 | Res 10K Ohm 1/2W 5% | R6 |
| 37 | 471-0104 | 3 | Res 100K Ohm 1/2W 5% | R7, R8, R22 |
| 38 | 471-0122 | 1 | Res 1.2K Ohm 1/2W 5% | R12 |
| 39 | 471-0220 | 1 | Res 22 Ohm 1/2W 5% | R14 |
| 40 | 471-0221 | 3 | Res 220 Ohm 1/2W 5% | R2, R4, R13 |
| 41 | 471-0331 | 8 | Res 330 Ohm 1/2W 5% | R10, R11, R15-R20 |
| 42 | 477-0002 | 3 | Res Pack 15x2.2K | RP1-RP3 |
| 43 | 481-0001 | 2 | Diode 1N4002 | D1, D2 |
| 44 | 481-0006 | 1 | Diode 1N914/IN4148 | D4 |
| 45 | 482-0006 | 1 | XSTR N4403 | Q7 |
| 46 | 482-0010 | 2 | XSTR PE8050 | Q1, Q2 |
| 47 | 482-0014 | 5 | XSTR N4401 | Q3-Q6, Q8 |
| 48 | 510-0052 | 1 | SWITCH PIANO DIP | SW1 |
| 49 | 510-0053 | 1 | SW Pushbutton Side PCM | SW3 |
| 50 | 213-0001 | 1 | SKT 24 Pin Dual INLN | XU25 |
| 51 | 213-0002 | 4 | SKT 18 Pin Dual INLN | XU26-XU29 |
| 52 | 213-0004 | 1 | SKT 16 Pin Dual INLN | XU15 |
| 53 | 213-0005 | 2 | SKT 40 Pin Dual INLN | XU21, XU22 |
| 54 | 510-0049 | 1 | Switch 8 Pos Dip | SW2 |
| 55 | 471-0472 | 1 | Res 4.7K Ohm 1/2W 5% | R21 |
| 56 | 280-0420 | 2 | Card Ejector, Snap On | |
| 57 | 471-0473 | 1 | Res 47K Ohm 1/2W 5% | R9 |
| 58 | 151-0031 | 1 | Cap CER .22 uf 16V | C45 |

# CPU Board Assembly

800-0107

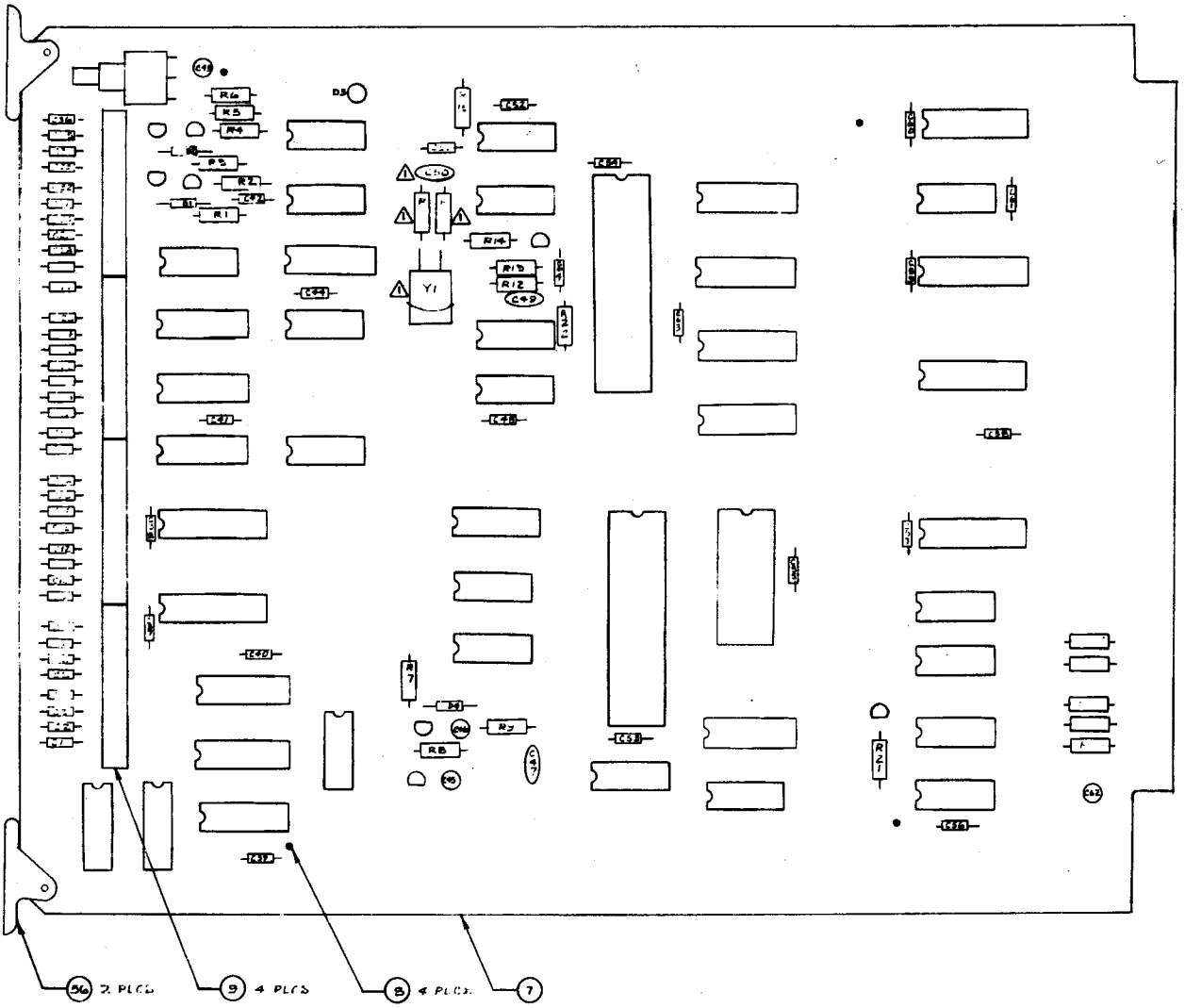

2716 PROM BOARD ASSEMBLY DRAWING NUMBER 800-3306

| ITEM NO. | PART NO. | QTY REQD | DESCRIPTION | REF DES |
|---|---|---|---|---|
| 1 | 800-0151-00 | 1 | Assy G-80 2716 PROM Board | |
| 2 | 316-1848-00 | 1 | IC EPROM 2716 | U1 |
| 3 | 316-1849-00 | 1 | IC EPROM 2716 | U2 |
| 4 | 316-1850-00 | 1 | IC EPROM 2716 | U3 |
| 5 | 316-1851-00 | 1 | IC EPROM 2716 | U4 |
| 6 | 316-1852-00 | 1 | IC EPROM 2716 | U5 |
| 7 | 316-1853-00 | 1 | IC EPROM 2716 | U6 |
| 8 | 316-1854-00 | 1 | IC EPROM 2716 | U7 |
| 9 | 316-1855-00 | 1 | IC EPROM 2716 | U8 |
| 10 | 316-1856-00 | 1 | IC EPROM 2716 | U9 |
| 11 | 316-1857-00 | 1 | IC EPROM 2716 | U10 |
| 12 | 316-1858-00 | 1 | IC EPROM 2716 | U11 |
| 13 | 316-1859-00 | 1 | IC EPROM 2716 | U12 |
| 14 | 316-1860-00 | 1 | IC EPROM 2716 | U13 |
| 15 | 316-1861-00 | 1 | IC EPROM 2716 | U14 |
| 16 | 316-1862-00 | 1 | IC EPROM 2716 | U15 |
| 17 | 316-1863-00 | 1 | IC EPROM 2716 | U16 |
| 18 | 316-1864-00 | 1 | IC EPROM 2716 | U17 |
| 19 | 316-1865-00 | 1 | IC EPROM 2716 | U18 |
| 20 | 316-1866-00 | 1 | IC EPROM 2716 | U19 |
| 21 | 316-1867-00 | 1 | IC EPROM 2716 | U20 |
| 22 | 316-1868-00 | 1 | IC EPROM 2716 | U21 |
| 23 | 316-1869-00 | 1 | IC EPROM 2716 | U22 |
| 24 | 316-1870-00 | 1 | IC EPROM 2716 | U23 |

G-80 2716 EPROM BOARD ASSEMBLY DRAWING NUMBER 800-0151

| ITEM NO. | PART NO. | QTY REQD. | DESCRIPTION | REF DES. |
|---|---|---|---|---|
| 1 | 151-0058 | 13 | Ceramic Capacitor, .01 uf, 16V AX | C2, C4, C6, C8, C9, C11, C14, C16, C18, C21, C23, C25, C27 |
| 2 | 151-0060 | 15 | Ceramic Capacitor, .1 uf, 16V AX | C1, C3, C5, C7, C10, C12, C13, C15, C17, C19, C20, C22, C24, C26, C28 |
| 3 | 170-0211 | 1 | PC Board | |
| 4 | 213-0001 | 23 | 24-Pin Dual Inline Socket | XU1-XU23 |
| 5 | 314-0055 | 1 | IC 74LS244 | U25 |
| 6 | 314-0058 | 3 | IC 74LS08 | U26-U28 |
| 7 | 314-0059 | 1 | IC 74LS10 | U29 |
| 8 | 314-0104 | 1 | IC 74LS138 | U30 |
| 9 | 314-0120 | 1 | IC 74LS154 | U24 |
| 10 | 211-0008 | 3 | Test Point Connector Pin | TP1-TP3 |
| 11 | 150-0088 | 1 | Electrolytic Capacitor, 10 uf, 25V | C29 |
| 12 | 280-0420 | 2 | Card Ejector, Snap On | |

# EPROM Board Assembly

800-0151

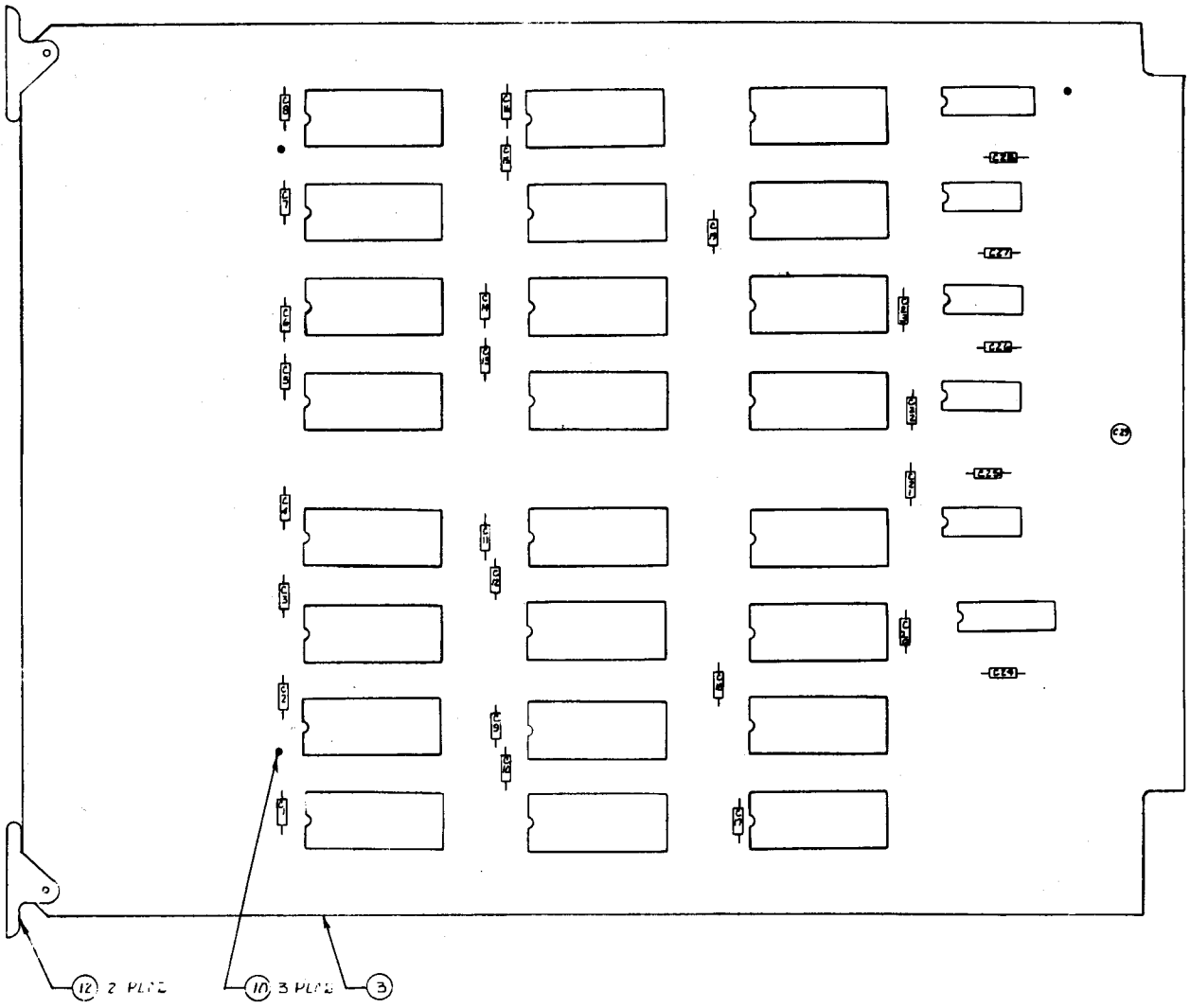

X-Y TIMING ASSEMBLY DRAWING NUMBER 800-0161

| ITEM NO. | PART NO. | QTY REQD. | DESCRIPTION | REF DES. |
|---|---|---|---|---|
| 1 | 151-0005 | 1 | Cap CER 680 pf 50V | C7 |
| 2 | 151-0058 | 25 | Cap .01 uf 16V AX | C1-C3, C6, C8-C28 |
| 3 | 170-0218 | 1 | PC Board | |
| 4 | 211-0008 | 1 | Conn Pin Test PT | TP1 |
| 5 | 212-0101 | 1 | Conn 4 Pin M RTA | |
| 6 | 213-0001 | 3 | SKT 24 Pin Dual INLN | XP1, XU39, XU50 |
| 7 | 213-0004 | 2 | SKT 16 Pin Dual INLN | XU1, XU4 |
| 8 | 213-0010 | 2 | SKT 8 Pin Dual INLN | XU2, XU3 |
| 9 | 230-0009 | 1 | Xtal 15.46848 | Y1 |
| 10 | 280-0420 | 2 | Card Ejector | |
| 11 | 313-0004 | 2 | IC LM741EN Dip | U2, U3 |
| 12 | 313-0044 | 2 | IC AD561 | U1, U4 |
| 13 | 314-0018 | 1 | IC 74LS00 | U28 |
| 14 | 314-0019 | 2 | IC 74LS04 | U30, U40 |
| 15 | 314-0040 | 1 | IC 74LS125 | U27 |
| 16 | 314-0046 | 1 | IC 74LS04 | U14 |
| 17 | 314-0055 | 3 | IC 74LS244 | U54, U57, U58 |
| 18 | 314-0058 | 2 | IC 74LS08 | U13, U21 |
| 19 | 314-0062 | 5 | IC 74LS74 | U25, U26, U42, U43, U52 |
| 20 | 314-0070 | 1 | IC 74LS86 | U29 |
| 21 | 314-0073 | 4 | IC 74LS175 | U35-U38 |
| 22 | 314-0074 | 6 | IC 74LS191 | U15-U20 |
| 23 | 314-0076 | 6 | IC 74LS157 | U5-U10 |
| 24 | 314-0078 | 1 | IC 74LS02 | U53 |
| 25 | 314-0093 | 4 | IC 74LS374 | U48, U49, U55, U56 |
| 26 | 314-0097 | 6 | IC 74LS161 | U31-U34, U41, U51 |
| 27 | 314-0101 | 4 | IC 74LS283 | U44-U47 |
| 28 | 314-0108 | 4 | IC 74LS107 | U11, U22-U24 |
| 29 | 314-0120 | 1 | IC 74LS154 | U50 |
| 30 | 314-0135 | 1 | IC 74LS11 | U12 |

X-Y TIMING ASSEMBLY-Continued DRAWING NUMBER 800-0161

| ITEM NO. | PART NO. | QTY REQD. | DESCRIPTION | REF DES. |
|---|---|---|---|---|
| 31 | 315-0019 | 1 | IC 2708 | U39 |
| 32 | 471-0202 | 2 | Res 2K Ohm 1/2W 5% | R2, R4 |
| 33 | 471-0331 | 2 | Res 330 Ohm 1/2W 5% | R7, R8 |
| 34 | 471-0392 | 2 | Res 3.9K Ohm 1/2W 5% | R1, R5 |
| 35 | 475-0024 | 2 | Pot 1K 10 Turn | R3, R6 |
| 36 | 151-0008 | 2 | Cap CER .001 uf 50V | C29, C30 |
| 37 | 150-0088 | 2 | Cap E 10 uf 25V RDL | C4, C5 |
| 38 | 151-0042 | 1 | Cap, Cer 470 pf 50V | C31 |
| 39 | 481-0006 | 2 | 1N914 Diode | D1, D2 |
| 40 | 151-0002 | 2 | Cap CER 100 pf 50V | C32, C33 |

# X-Y Timing Board Assembly

800-0161

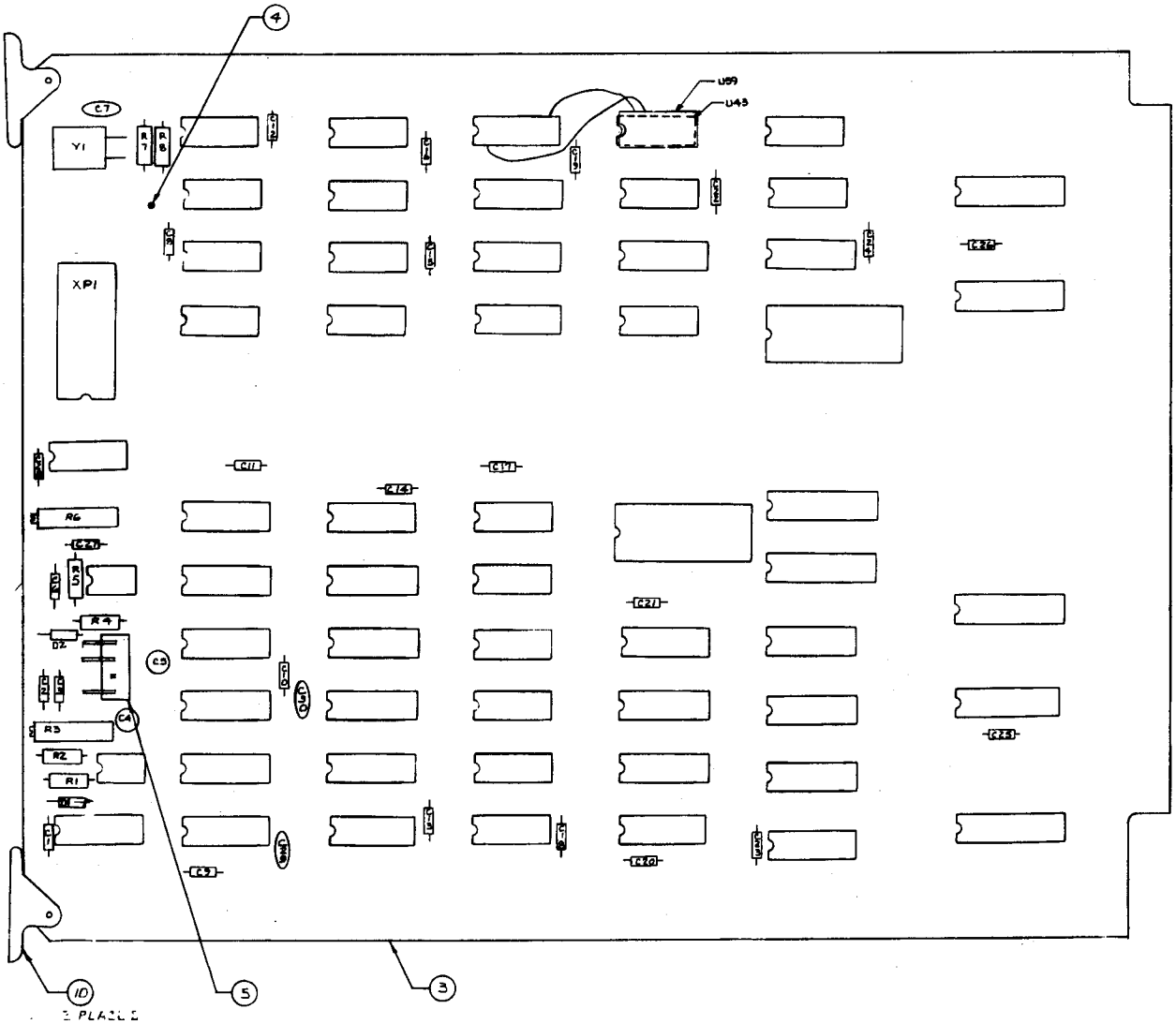

X-Y CONTROL ASSEMBLY DRAWING NUMBER 800-0163

| ITEM NO. | PART NO. | QTY REQD. | DESCRIPTION | REF DES. |
|---|---|---|---|---|
| 1 | 150-0088 | 1 | Cap E 10 uf 25V | C23 |
| 2 | 151-0002 | 1 | Cap CER 100 pf 50V | C14 |
| 3 | 151-0058 | 21 | Cap CER .01 uf 16Y AX | C1-C13, C15-C22 |
| 4 | 170-0219 | 1 | PC Board | |
| 5 | 212-0101 | 1 | Conn 4 Pin M RTA | |
| 6 | 213-0001 | 1 | SKT 24 Pin Dual INLN | XP1 |
| 7 | 280-0330 | 2 | Card Ejector | |
| 8 | 314-0018 | 1 | IC 74LS00 | U40 |
| 9 | 314-0019 | 3 | IC 74LS04 | U9, U32, U42 |
| 10 | 314-0040 | 1 | IC 74LS125 | U39 |
| 11 | 314-0055 | 7 | IC 74LS244 | U20, U21, U35, U36, U48, U49, U54 |
| 12 | 314-0058 | 1 | IC 74LS08 | U37 |
| 13 | 314-0059 | 2 | IC 74LS10 | U18, U41 |
| 14 | 314-0060 | 1 | IC 74LS20 | U50 |
| 15 | 314-0062 | 2 | IC 74LS74 | U19, U51 |
| 16 | 314-0067 | 1 | IC 74LS30 | U47 |
| 17 | 314-0068 | 2 | IC 74LS32 | U4, U38 |
| 18 | 314-0074 | 3 | IC 74LS191 | U15-U17 |
| 19 | 314-0075 | 1 | IC 74LS393 | U22 |
| 20 | 314-0078 | 1 | IC 74LS02 | U23 |
| 21 | 314-0087 | 1 | IC 74LS139 | U46 |
| 22 | 314-0093 | 2 | IC 74LS374 | U2, U13 |
| 23 | 314-0097 | 5 | IC 74LS161 | U10-U12, U34, U52 |
| 24 | 314-0099 | 1 | IC 74LS245 | U14 |
| 25 | 314-0101 | 1 | IC 74LS283 | U33 |
| 26 | 314-0108 | 1 | IC 74LS107 | U53 |
| 27 | 314-0127 | 1 | IC 74LS164 | U3 |
| 28 | 314-0128 | 4 | IC 74LS95 | U6, U7, U44, U45 |
| 29 | 314-0137 | 2 | IC 74LS09 | U1, U5 |
| 30 | 315-0046 | 8 | IC 2114 | U24-U31 |

| ITEM NO. | PART NO. | QTY REQD. | DESCRIPTION | REF DES. |
|---|---|---|---|---|
| 31 | 315-0072 | 2 | IC AM25LS14 | U8, U43 |
| 32 | 471-0123 | 3 | Res 12K Ohm 1/2W 5% | R1, R3, R5 |
| 33 | 471-0472 | 1 | Res 4.7K Ohm 1/2W 5% | R7 |
| 34 | 471-0622 | 3 | Res 6.2K Ohm 1/2W 5% | R2, R4, R6 |
| 35 | 481-0006 | 6 | Diode 1N914/1N4148 | D1-D6 |
| 36 | 212-0002 | 8 | Socket 18 Pin | XU24-XU31 |
| 37 | 471-0471 | 1 | Res 470 Ohm 1/2W 5% | R8 |
| 38 | 471-0103 | 1 | Res 10K Ohm 1/2W 5% | R9 |
| 39 | 471-0332 | 1 | Res 3.3K Ohm 1/2W 5% | R11 |
| 40 | 471-0512 | 1 | Res 5.1K Ohm 1/2W 5% | R10 |
| 41 | 482-0006 | 1 | XSTR 2N4403 | Q1 |
| 42 | 482-0014 | 1 | XSTR 2N4401 | Q2 |

# X-Y Control Board Assembly

800-0163

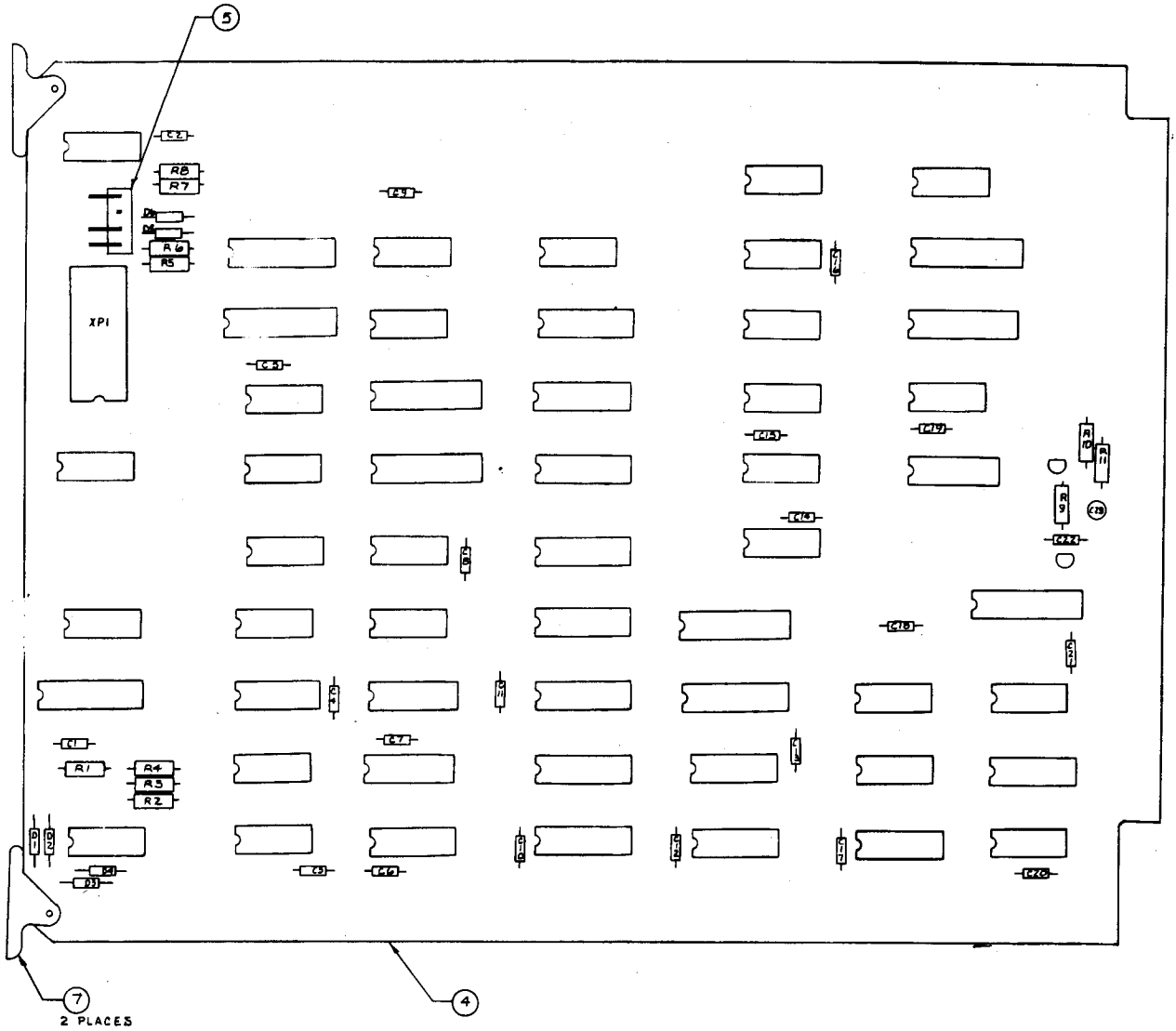

UNIVERSAL SOUND BOARD ASSEMBLY DRAWING NUMBER 800-0377

| ITEM NO. | PART NO. | QTY REQD. | DESCRIPTION | REF DES. |
|---|---|---|---|---|
| 1 | 150-0087 | 2 | Cap-E 4.7 f 25V RDL | C1, C4 |
| 2 | 150-0090 | 1 | Cap-E 33 f 25V RDL | C60 |
| 3 | 150-0135 | 7 | Cap-E 1 f 25V RDL | C14, C15, C33-C36, C54 |
| 4 | 151-0002 | 9 | Cap-CER 100 pf 50V | C6-C8, C19-C24 |
| 5 | 151-0021 | 2 | Cap-CER 20 pf 50V | C41, C42 |
| 6 | 151-0060 | 29 | Cap .1 f 16V AX | C3, C5, C10-C12, C18, C26-C31, C37-C40, C43-C50, C57-C59, C61, C62 |
| 7 | 151-0011 | 3 | Cap-F .15 f 50V | C51, C55, C56 |
| 8 | 152-0085 | 6 | Cap-F .01 f 50V | C9, C13, C16, C17, C25, C32 |
| 9 | 152-0144 | 1 | Cap-F .082 f 50V | C53 |
| 10 | 170-0259 | 1 | PC Board | |
| 11 | 212-0081 | 1 | Conn 4 Pin M RTG PLZD | P1 |
| 12 | 213-0001 | 2 | Skt 24 Pin Dual INLN | XU50, XU51 |
| 13 | 213-0022 | 2 | Skt 18 Pin Dual INLN | XU44, XU45 |
| 14 | | | | |
| 15 | 213-0005 | 1 | Skt 40 Pin Dual INLN | XU46 |
| 16 | 230-0037 | 1 | XTAL 6.0 MHz | Y1 |
| 17 | 280-0420 | 2 | Card Ejector Snap On | |
| 18 | 313-0037 | 1 | IC TL081 | U49 |
| 19 | 313-0038 | 13 | IC TL082 | U1, U3-U6, U9, U17-U23 |
| 20 | 314-0018 | 1 | IC 74LS00 | U36 |
| 21 | 314-0055 | 1 | IC 74LS244 | U55 |
| 22 | 314-0060 | 1 | IC 74LS20 | U40 |
| 23 | 314-0062 | 2 | IC 74LS74 | U2, U38 |
| 24 | 314-0067 | 1 | IC 74LS30 | U59 |

| ITEM NO. | PART NO. | QTY REQD. | DESCRIPTION | REF DES. |
|---|---|---|---|---|
| 25 | 314-0068 | 3 | IC 74LS32 | U35, U37, U39 |
| 26 | 314-0075 | 2 | IC 74LS393 | U32, U33 |
| 27 | 314-0076 | 3 | IC 74LS157 | U56-U58 |
| 28 | 314-0085 | 1 | IC 74LS14 | U48 |
| 29 | 314-0087 | 2 | IC 74LS139 | U10, U11 |
| 30 | 314-0099 | 2 | IC 74LS245 | U52, U53 |
| 31 | 314-0100 | 1 | IC 74LS273 | U54 |
| 32 | 314-0104 | 1 | IC 74LS138 | U34 |
| 33 | 314-0131 | 1 | IC 74LS373 | U47 |
| 34 | 315-0035 | 1 | IC MM5837 | U60 |
| 35 | 315-0046 | 2 | IC 2114 | U44, U45 |
| 36 | 315-0059 | 3 | IC 8253 | U41-U43 |
| 37 | 315-0077 | 1 | IC 8035 | U46 |
| 38 | 315-0079 | 6 | IC CD4053 | U7, U8, U15, U16, U30, U31 |
| 39 | 315-0132 | 9 | IC AD7524 | U12-U14, U24-U29 |
| 40 | 315-0133 | 2 | IC 2K x 8 Static RAM | U50, U51 |
| 41 | 470-0102 | 8 | Res 1K Ohm 1/4W 5% | R23, R24, R30, R33, R53, R56, R59, R63 |
| 42 | 470-0103 | 11 | Res 10K Ohm 1/4W 5% | R20-R22, R27, R40, R41, R50-R52, R57, R58 |
| 43 | 470-0104 | 29 | Res 100K Ohm 1/4W 5% | R1, R7-R10, R12, R13, R15, R16, R18, R19, R25, R28, R29, R31, R32, R34-R36, R38, R39, R42, R43, R45, R46, R48, R49, R54, R55 |
| 44 | 470-0105 | 2 | Res 1M ohm 1/4W 5% | R2, R11 |
| 45 | 470-0124 | 1 | Res 120K Ohm 1/4W 5% | R6 |

UNVERISAL SOUND BOARD ASSEMBLY-Continued DRAWING NUMBER 800-0377

| ITEM NO. | PART NO. | QTY REQD. | DESCRIPTION | REF DES. |
|---|---|---|---|---|
| 46 | 470-0222 | 2 | Res 2.2K Ohm 1/4W 5% | R5, R60 |
| 47 | 470-0271 | 1 | Res 270 Ohm 1/4W 5% | R62 |
| 48 | 470-0272 | 2 | Res 2.7K Ohm 1/4W 5% | R64, R65 |
| 49 | 470-0333 | 4 | Res 33K Ohm 1/4W 5% | R14, R37, R44, R61 |
| 50 | 470-0334 | 1 | Res 330K Ohm 1/4W 5% | R3 |
| 51 | 470-0562 | 3 | Res 5.6K Ohm 1/4W 5% | R17, R26, R47 |
| 52 | 470-0332 | 1 | Res 3.3K Ohm 1/4W 5% | R4 |
| 53 | 482-0023 | 1 | XSTR 2N4093 | Q1 |
| 54 | 152-0054 | 1 | Cap-F .001 f 50V | C2 |
| 55 | 152-0076 | 1 | Cap-F .1 f 50V | C52 |
| 56 | 212-0158 | 1 | Conn Header 8 Pos | P2 |
| 57 | 212-0159 | 1 | Conn Jumper | |

# Universal Sound Board Assembly

**800-0377**

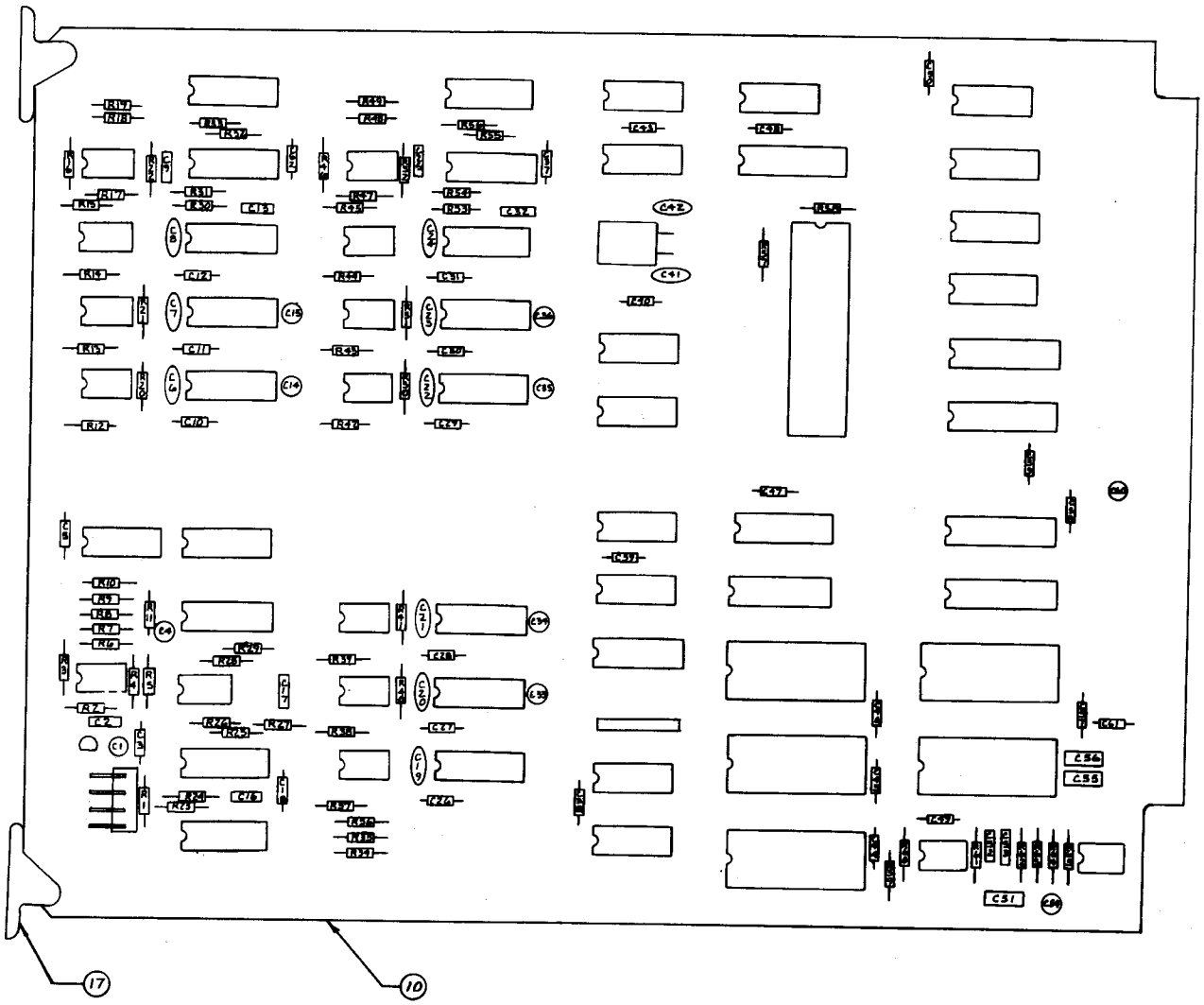

SPEECH BOARD ASSEMBLY DRAWING NUMBER 800-3308

| ITEM NO. | PART NO. | QTY REQD. | DESCRIPTION | REF DES |
|---|---|---|---|---|
| 1 | 800-0294-00 | 1 | Assy 2732 Speech PCB | |
| 2 | 316-1607-00 | 1 | IC EPROM 2716 | U7 |
| 3 | 316-1871-00 | 1 | IC 2732 | U6 |
| 4 | 316-1872-00 | 1 | IC 2732 | U5 |

SPEECH BOARD ASSEMBLY DRAWING NUMBER 800-0294

| ITEM NO. | PART NO. | QTY REQD. | DESCRIPTION | REF DES. |
|---|---|---|---|---|
| 1 | 150-0087 | 1 | Cap E 4.7 uf 25V | C2 |
| 2 | 150-0088 | 5 | Cap E 10 uf 25V | C13, C46-C49 |
| 3 | 151-0021 | 2 | Cap Cer 20 pf 50V | C6, C7 |
| 4 | 151-0056 | 1 | Cap Cer .047 uf 50V | C10 |
| 5 | 151-0058 | 10 | Cap Cer .01 uf 16V AX | C5, C11, C12, C14-17, C19, C20, C44 |
| 6 | 151-0060 | 3 | Cap Cer .1 uf 16V AX | C9, C37, C38 |
| 7 | 170-0223 | 1 | PC Board | |
| 8 | 212-0012 | 1 | Conn 6 Pin M | |
| 9 | 230-0033 | 1 | Crytral 3.12 MHZ | Y1 |
| 10 | 280-0420 | 2 | Card Ejector | Snap On |
| 11 | 313-0037 | 1 | IC TL081 CP | U8 |
| 12 | 313-0038 | 1 | IC TL082 CP | U11 |
| 13 | 314-0058 | 1 | IC 74LS08 | U35 |
| 14 | 314-0062 | 1 | IC 74LS74 | U15 |
| 15 | 314-0067 | 1 | IC 74LS30 | U37 |
| 16 | 314-0072 | 1 | IC 74LS174 | U20 |
| 17 | 314-0085 | 1 | IC 74LS14 | U38 |
| 18 | 314-0087 | 1 | IC 74LS139 | U10 |
| 19 | 314-0100 | 1 | IC 74LS273 | U21 |
| 20 | 314-0042 | 1 | IC 7406 | U13 |
| 21 | 314-0131 | 1 | IC 74LS373 | U9 |
| 22 | 315-0061 | 1 | IC ST-32034 | U2 |
| 23 | 315-0077 | 1 | IC 8035 | U14 |
| 24 | 315-0079 | 1 | IC CD4053 | U12 |
| 25 | 316-0788 | 1 | IC Prom Speech Bd Decoder | U30 |
| 26 | 471-0103 | 5 | Res 10K Ohm 1/2W 5% | R17, R21, R27-R29 |
| 27 | 471-0106 | 1 | Res 10 Meg Ohm 1/2W 5% | R3 |
| 28 | 471-0222 | 1 | Res 2.2K Ohm 1/2W 5% | R24 |
| 29 | 471-0223 | 4 | Res 22K Ohm 1/2W 5% | R13, R14, R18, R22 |
| 30 | 471-0274 | 1 | Res 270K Ohm 1/2W 5% | R19 |

SPEECH BOARD ASSEMBLY-Continued DRAWING NUMBER 800-0294

| ITEM NO. | PART NO. | QTY REQD. | DESCRIPTION | REF DES. |
|---|---|---|---|---|
| 31 | 471-0471 | 2 | Res 470 Ohm 1/2W 5% | R25, R26 |
| 32 | 477-0002 | 1 | Res Pack 15x2.2K | RP2 |
| 33 | 471-0683 | 1 | Res 68K Ohm 1/2W 5% | R30 |
| 34 | 475-0022 | 1 | Pot 100K 10T PC MNT | R74 |
| 35 | 151-0009 | 1 | Cap Cer .003 uf 100V | C50 |
| 36 | 471-0472 | 1 | Res 4.7K Ohm 1/2W 5% | R20 |
| 37 | 21 -0001 | 5 | SKT 24 Pin Dual INLN | XU3-XU7 |
| 38 | 213-0004 | 1 | SKT 16 Pin Dual INLN | XU30 |
| 39 | 213-0005 | 1 | SKT 40 Pin Dual | XU14 |
| 40 | 213-0008 | 2 | SKT 20 Pin Dual INLN | XU9, XU21 |
| 41 | 213-0010 | 2 | SKT 8 Pin Dual INLN | XU8, XU11 |
| 42 | 213-0012 | 1 | SKT 28 Pin Dual INLN | XU2 |
| 43 | 471-0102 | 1 | Res 1K Ohm 1/2W 5% | R75 |

# Speech Board Assembly

**800-0294**

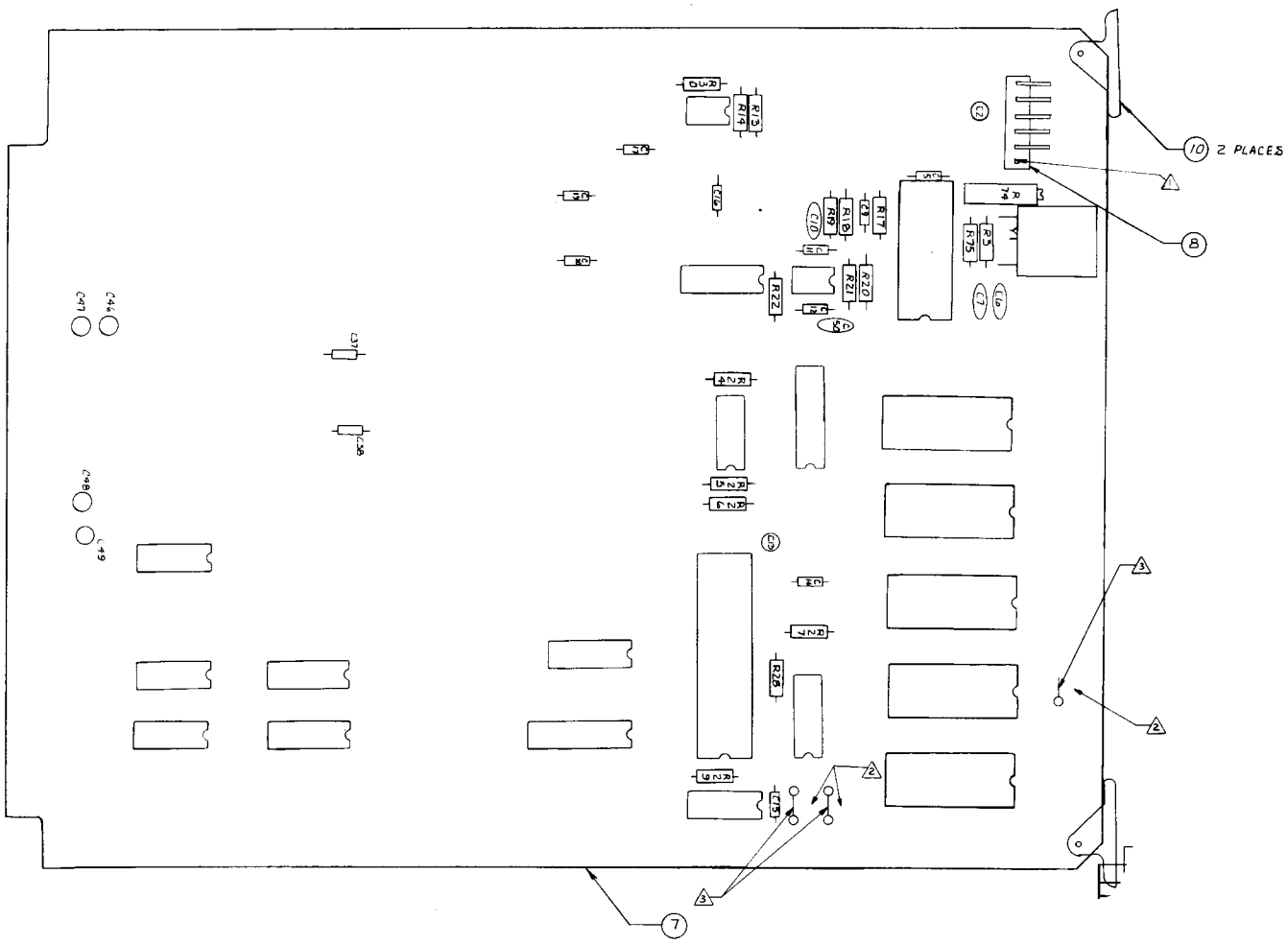

G-80 POWER SUPPLY CHASSIS ASSEMBLY DRAWING NUMBER 800-0191

| ITEM NO. | PART NO. | QTY REQD. | DESCRIPTION | REF DES. |
|---|---|---|---|---|
| 1 | 530-0016 | 1 | Heat Sink, G-80 Pwr Sup. | |
| 2 | 250-0460 | 1 | Chassis Support | |
| 3 | 250-0461 | 1 | Cover | |
| 4 | 800-0170 | 1 | PCB Assembly | |
| 5 | 253-0206 | 6 | PCB Support, Threaded | |
| 6 | 281-0032-06 | 8 | Thread Forming Screw, #6 Type B, 3/8 long | |
| 7 | | | | |
| 8 | 482-0104 | 1 | Power Transistor | TIP 141 |
| 9 | 313-0023 | 1 | Negative 5 Volt Regulator | 320T5 |
| 10 | 313-0014 | 1 | Positive 12 Volt Regulator | 340T12 |
| 11 | 313-0015 | 1 | Negative 12 Volt Regulator | 320T12 |
| 12 | 482-0100 | 1 | Power Transistor (Audio Amp) | TIP 125 |
| 13 | 482-0019 | 1 | Power Transistor (Audio Amp) | TIP 120 |
| 14 | | | | |
| 15 | | | | |
| 16 | 420-0557 | 1 | Fuse Decal | |
| 17 | 280-0117 | 1 | Tab Rivet Male 1/4" | |
| 18 | 420-0575 | 1 | Power Supply B Decal | |
| 19 | 281-0001-08 | 6 | Pan Head Phillips Screws, 4-40x1/2" Lg | |
| 20 | 280-0341-00 | 6 | Shoulder Washer, #4 | |
| 21 | 310-0006-01 | 6 | Transistor Insulator, TO-220 | |
| 22 | 284-0001-00 | 6 | Flat Washer #4 | |
| 23 | 284-0031-00 | 6 | Split Lock Washer #4 | |
| 24 | 283-0021-00 | 6 | Machine Hex Nut, 4-40 | |
| 25 | 800-0243 | 1 | G-80 Transistor Harness Assembly P1 | |

G-80 POWER SUPPLY CHASSIS ASSEMBLY-Continued DRAWING NUMBER 800-0191

| ITEM NO. | PART NO. | QTY REQD. | DESCRIPTION | REF DES. |
|---|---|---|---|---|
| 26 | 800-0244 | 1 | G-80 Transistor Harness Assembly, P2 | |
| 27 | 800-0245 | 1 | G-80 Transistor Harness Assembly, P3 | |
| 28 | 800-0246 | 1 | G-80 Transistor Harness Assembly, P4 | |
| 29 | 800-0247 | 1 | G-80 Transistor Harness Assembly, P5 | |
| 30 | 800-0248 | 1 | G-80 Transistor Harness Assembly, P6 | |
| 31 | 310-0007-01 | 1 | Transistor Insulator "H", TO-218 | |

# G-80 Power Supply Chassis Assembly 800-0191

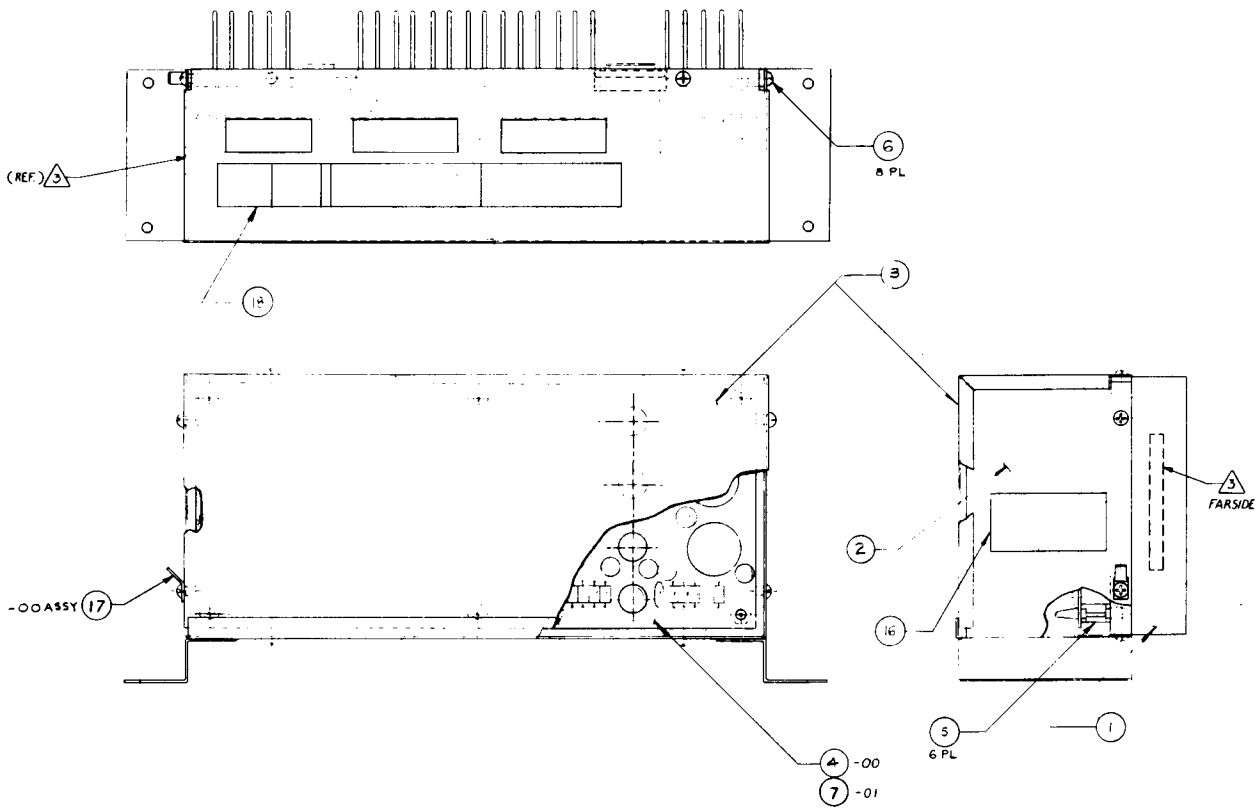


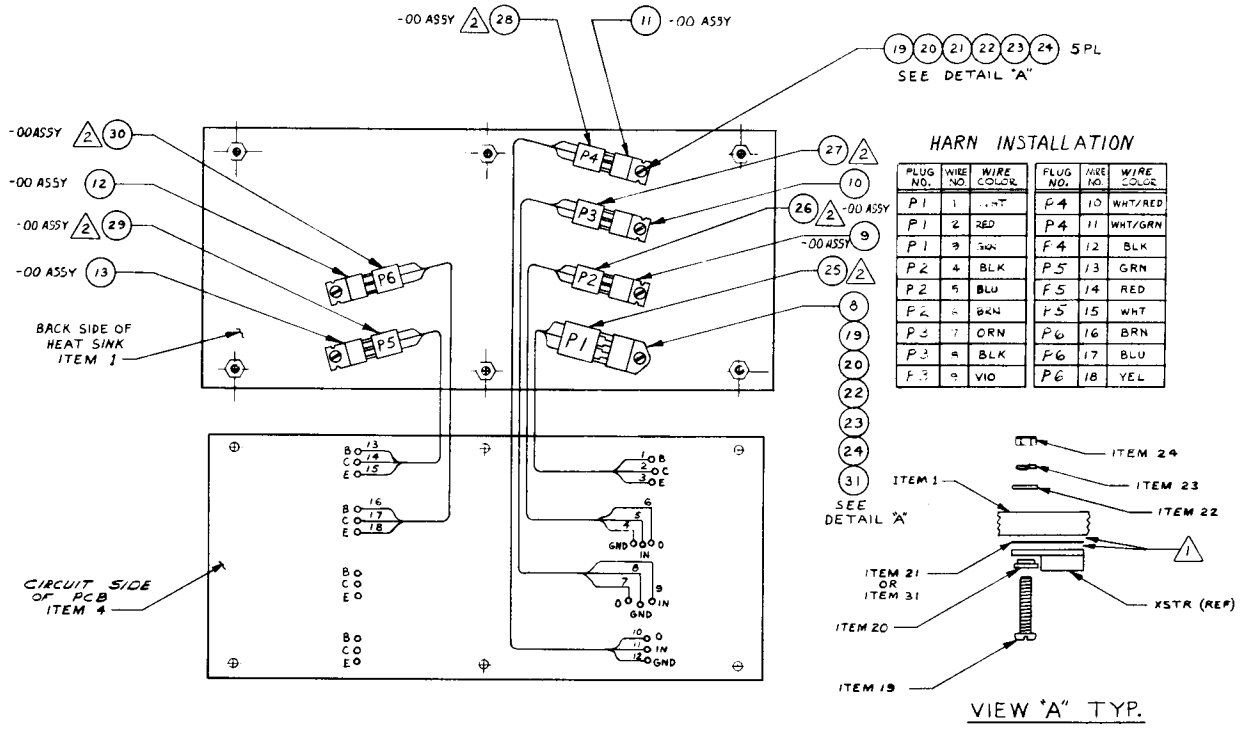


| PLUG NO. | WIRE NO. | WIRE COLOR |
|---|---|---|
| P1 | 1 | WHT |
| P1 | 2 | RED |
| P1 | 3 | BRN |
| P2 | 4 | BLK |
| P2 | 5 | BLU |
| P2 | 6 | BRN |
| P3 | 7 | ORN |
| P3 | 8 | BLK |
| P3 | 9 | VIO |

| PLUG NO. | WIRE NO. | WIRE COLOR |
|---|---|---|
| P4 | 10 | WHT/RED |
| P4 | 11 | WHT/GRN |
| P4 | 12 | BLK |
| P5 | 13 | GRN |
| P5 | 14 | RED |
| P5 | 15 | WHT |
| P6 | 16 | BRN |
| P6 | 17 | BLU |
| P6 | 18 | YEL |

G-80 POWER SUPPLY PC ASSEMBLY DRAWING NUMBER 800-0170

| ITEM NO. | PART NO. | QTY REQD. | DESCRIPTION | REF DES. |
|---|---|---|---|---|
| 1 | 150-0088 | 9 | Electrolytic Capacitor, 10 uf, 25V | C5, C8, C10, C18, C19, C23, C24, C26, C31 |
| 2 | 150-0092 | 1 | Electrolytic Capacitor, 100 uf, 25V | C17 |
| 3 | 150-0095 | 1 | Electrolytic Capacitor, 3300 uf, 25V | C30 |
| 4 | 150-0096 | 3 | Electrolytic Capacitor, 6800 uf, 16V | C32-C34 |
| 5 | 150-0097 | 4 | Electrolytic Capacitor, 4700 uf, 25V | C15, C16, C27, C28 |
| 6 | 151-0002 | 1 | Ceramic Capacitor, 100 pf, 50V | C9 |
| 7 | 151-0007 | 1 | Ceramic Capacitor, .005 uf, 100V | C20 |
| 8 | 151-0011 | 4 | Ceramic Capacitor, .01 uf, 50V | C21, C22, C25, C29 |
| 9 | 151-0012 | 3 | Ceramic Capacitor, .1 uf, 50V | C2, C13, C14 |
| 10 | 151-0021 | 1 | Ceramic Capacitor, 20 pf, 50V | C7 |
| 11 | 170-0222 | 1 | PC Board | |
| 12 | 212-0020 | 2 | 10-Pin Male Connector RTA | |
| 13 | 212-0081 | 2 | 4-Pin Male Connector RTA | |
| 14 | 313-0001 | 1 | IC LM723 Dip | U1 |
| 15 | 471-0011 | 1 | Resistor, 10 Ohm, 1/2W 5% | R2 |
| 16 | 471-0101 | 1 | Resistor, 100 Ohm, 1/2W 5% | R32 |
| 17 | 471-0102 | 3 | Resistor, 1K Ohm, 1/2W 5% | R10, R27, R29 |
| 18 | 471-0103 | 2 | Resistor, 10K Ohm, 1/2W 5% | R6, R30 |
| 19 | 471-0104 | 1 | Resistor, 100K Ohm, 1/2W 5% | R23 |
| 20 | 471-0222 | 2 | Resistor, 2.2K Ohm, 1/2W 5% | R21, R22 |

| ITEM NO. | PART NO. | QTY REQD. | DESCRIPTION | REF DES. |
|---|---|---|---|---|
| 21 | 471-0223 | 2 | Resistor, 22K Ohm, 1/2W 5% | R5, R9 |
| 22 | 471-0332 | 1 | Resistor, 3.3K Ohm, 1/2W 5% | R28 |
| 23 | 471-0182 | 1 | Resistor, 1.8K Ohm, 1/2W 5% | R26 |
| 24 | 471-0681 | 1 | Resistor, 680 Ohm, 1/2W 5% | R7 |
| 25 | 473-05R0 | 1 | Resistor, .05 Ohm, 5W 3% | R25 |
| 26 | 473-00R2 | 2 | Resistor, .2 Ohm, 3W 5% | R14, R15 |
| 27 | 475-0004 | 1 | Pot 1K Car PCMTV | R31 |
| 28 | 481-0002 | 2 | Diode MR751 | D10, D12 |
| 29 | 481-0004 | 10 | Diode MR501 | D6-D9, D11, D13-D17 |
| 30 | 481-0006 | 3 | Diode 1N914/1N4148 | D1, D4, D5 |
| 31 | 482-0006 | 2 | Transistor 2N4403 | Q1, Q7 |
| 32 | 482-0014 | 2 | Transistor 2N4401 | Q2, Q3 |
| 33 | 514-0002 | 2 | Fuse 3A Norm | F1, F2 |
| 34 | 514-0003 | 8 | Clip Fuse Mounting | |
| 35 | 514-0006 | 1 | Fuse 1.5A Norm | F4 |
| 36 | 514-0008 | 1 | Fuse 10A Slow Blow | F3 |
| 37 | 800-0191 | 1 | Schematic Reference | |
| 38 | 471-0220 | 1 | Resistor, 22 Ohm, 1/2W 5% | R8 |
| 39 | 471-0221 | 1 | Resistor, 220 Ohm, 1/2W 5% | R33 |

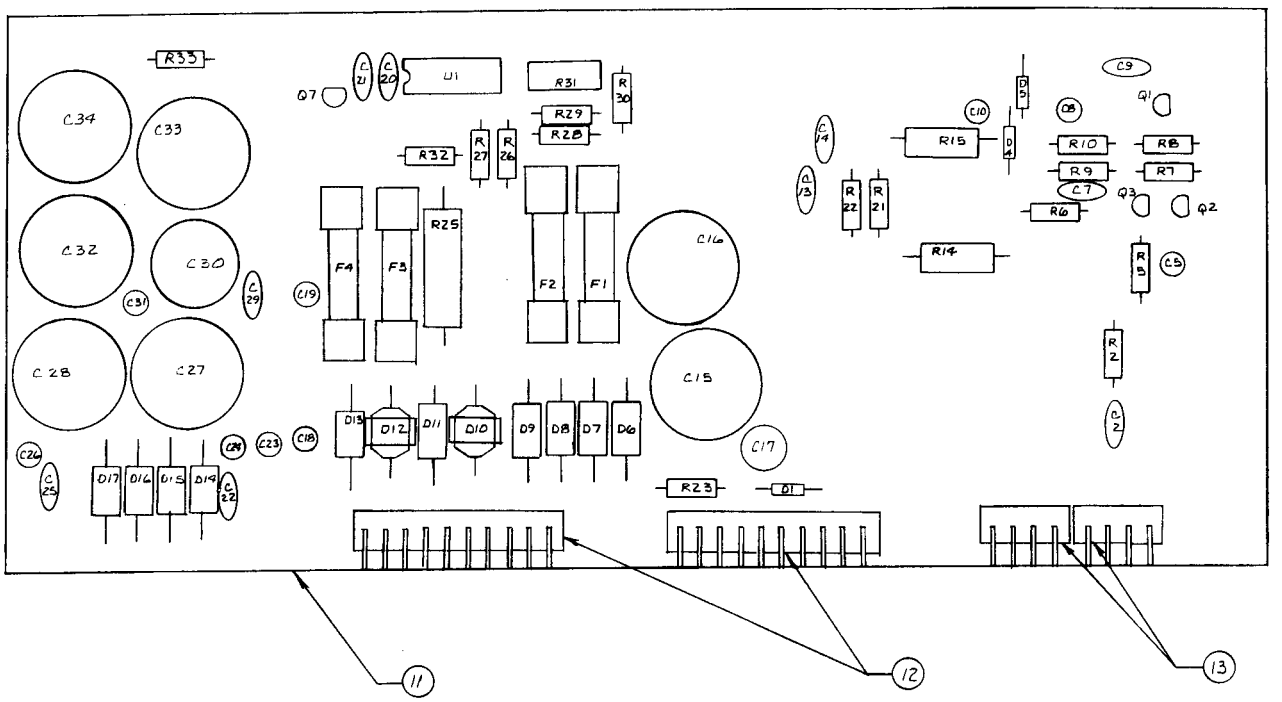
R33
C34
C33
C32
C30
C31
C29
C28
C27
C24
C25
C26
C22
C23
C18
C19
D17
D16
D15
D14
D13
D12
D11
D10
D9
D8
D7
D6
Q7
C21
C20
U1
R31
R30
R29
R28
R32
R27
R26
R25
F4
F3
F2
F1
C16
C15
C17
R23
D1
C14
Q3
R22
R21
R15
C10
D5
D4
C9
Q1
Q8
R10
R9
C7
R6
R8
R7
Q2
R14
R5
C5
R2
C2
11
12
13

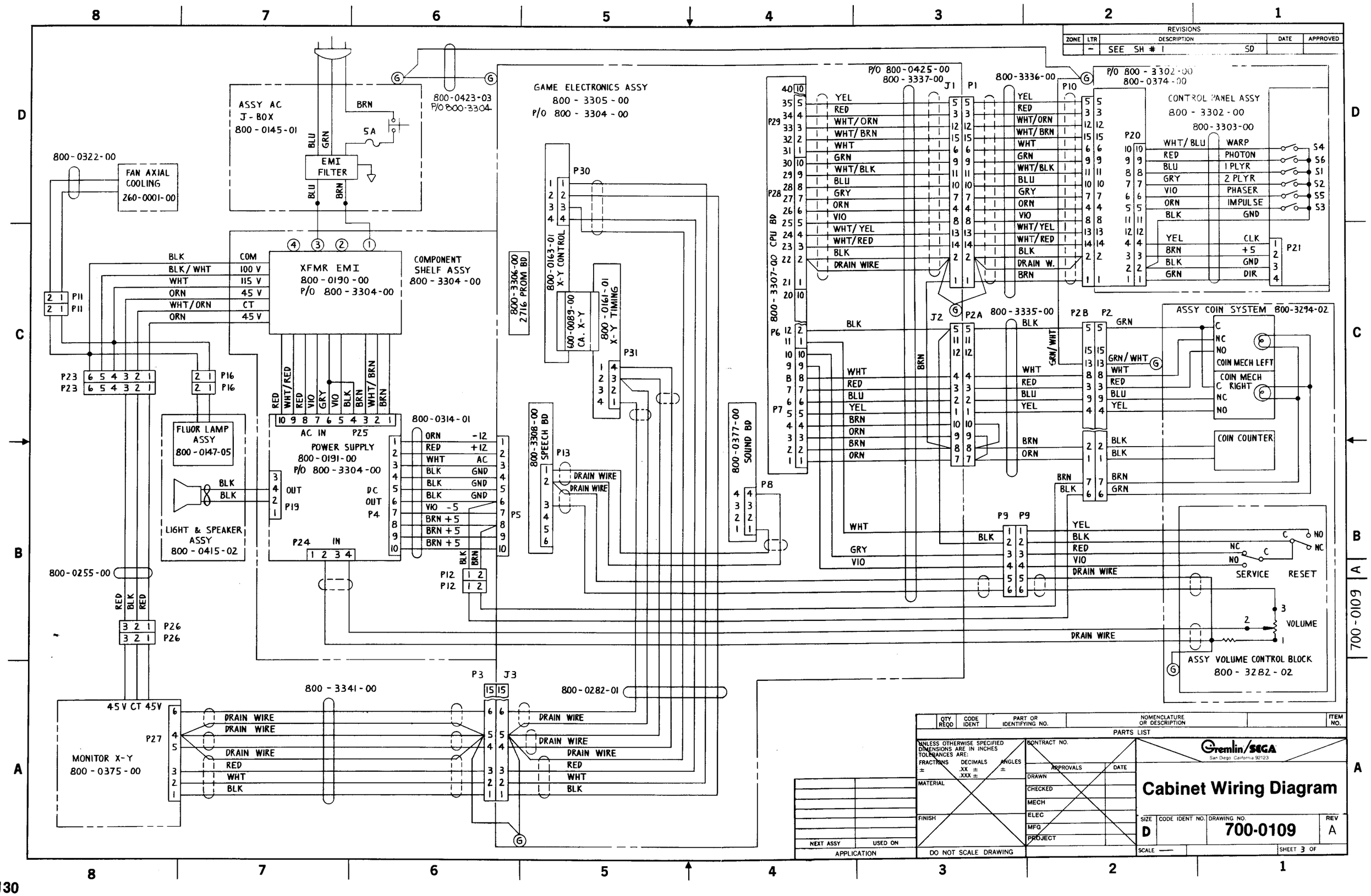

REVISIONS
ZONE LTR DESCRIPTION DATE APPROVED
– SEE SH # 1 SD
ASSY AC J-BOX 800-0145-01
EMI FILTER
800-0423-03 P/O 800-3304
GAME ELECTRONICS ASSY 800-3305-00 P/O 800-3304-00
800-0322-00
FAN AXIAL COOLING 260-0001-00
XFMR EMI 800-0190-00 P/O 800-3304-00
COMPONENT SHELF ASSY 800-3304-00
800-3306-00 2716 PROM BD
800-0163-01 X-Y CONTROL
600-0089-00 CA. X-Y
800-0161-01 X-Y TIMING
800-3308-00 SPEECH BD
800-0377-00 SOUND BD
800-3307-00 CPU BD
P/O 800-0425-00 800-3337-00
800-3336-00
P/O 800-3302-00 800-0374-00
CONTROL PANEL ASSY 800-3302-00
800-3303-00
800-3335-00
ASSY COIN SYSTEM 800-3294-02
COIN MECH LEFT
COIN MECH RIGHT
COIN COUNTER
FLUOR LAMP ASSY 800-0147-05
LIGHT & SPEAKER ASSY 800-0415-02
POWER SUPPLY 800-0191-00 P/O 800-3304-00
800-0314-01
800-0255-00
800-3341-00
800-0282-01
MONITOR X-Y 800-0375-00
SERVICE
RESET
VOLUME
ASSY VOLUME CONTROL BLOCK 800-3282-02
700-0109 A
PARTS LIST
QTY REQD CODE IDENT PART OR IDENTIFYING NO. NOMENCLATURE OR DESCRIPTION ITEM NO.
UNLESS OTHERWISE SPECIFIED DIMENSIONS ARE IN INCHES TOLERANCES ARE:
FRACTIONS ± DECIMALS .XX ± .XXX ± ANGLES ±
MATERIAL
FINISH
DO NOT SCALE DRAWING
CONTRACT NO.
APPROVALS DATE
DRAWN
CHECKED
MECH
ELEC
MFG
PROJECT
NEXT ASSY USED ON
APPLICATION
Gremlin/SEGA
San Diego California 92123
Cabinet Wiring Diagram
SIZE D CODE IDENT NO. DRAWING NO. 700-0109 REV A
SCALE — SHEET 3 OF

## EMI Transformer Assembly

800-0190

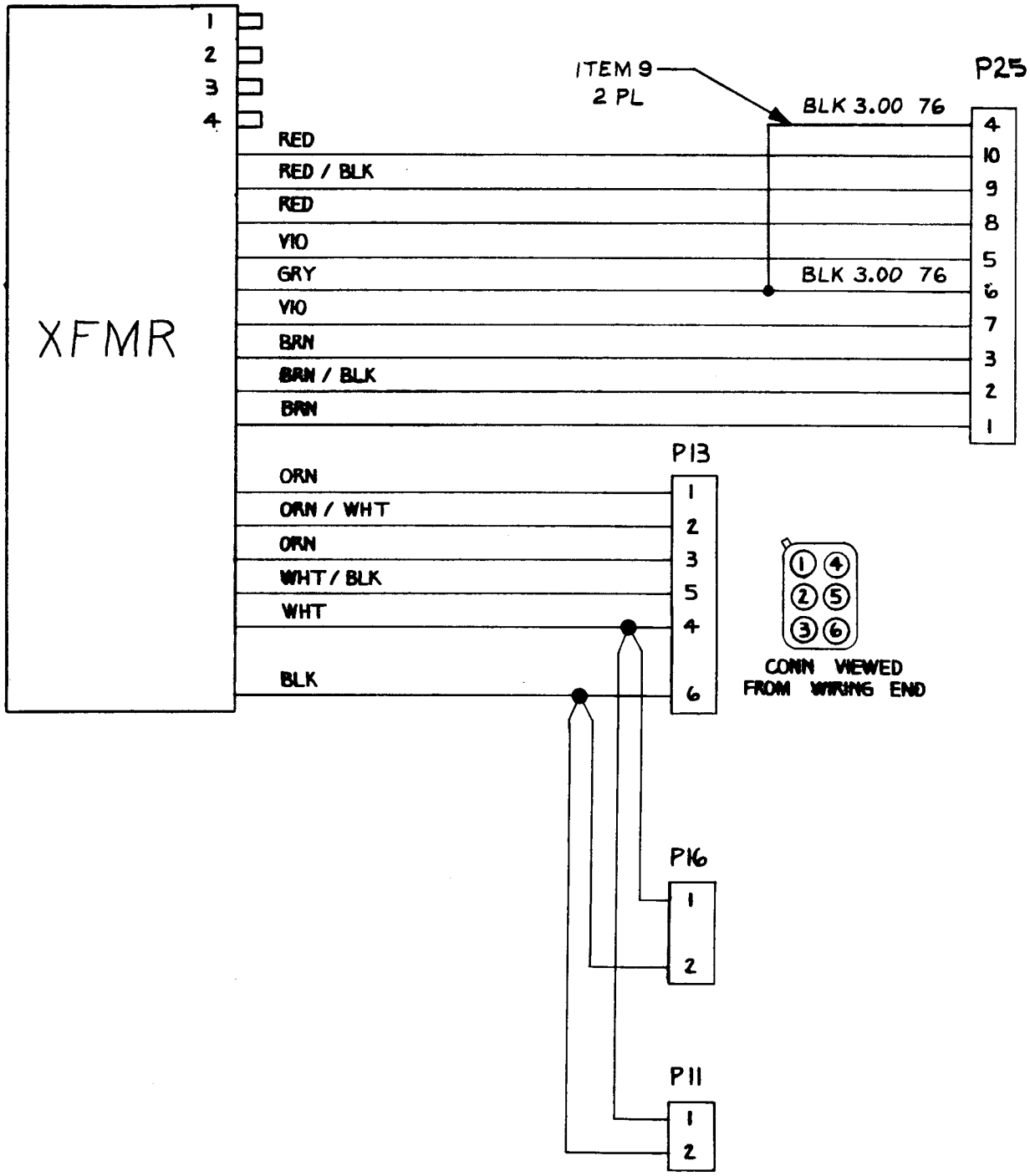


## Coin System Assembly

800-3294

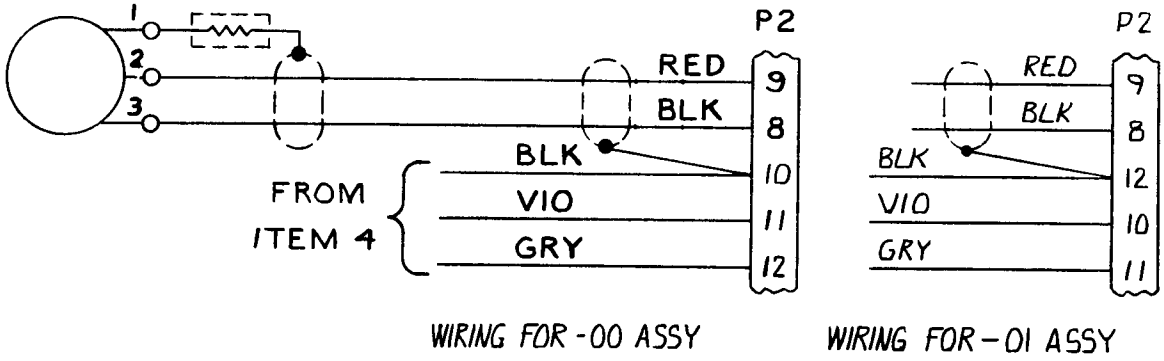

## AC Junction Box Assembly

800-0145

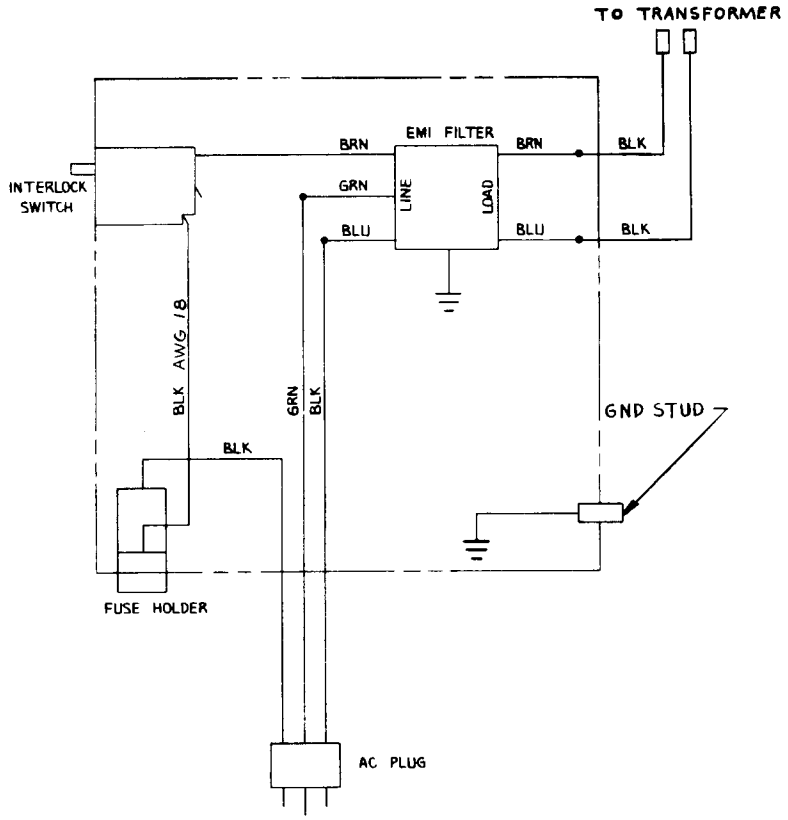


## Game Electronics Assembly

800-3305

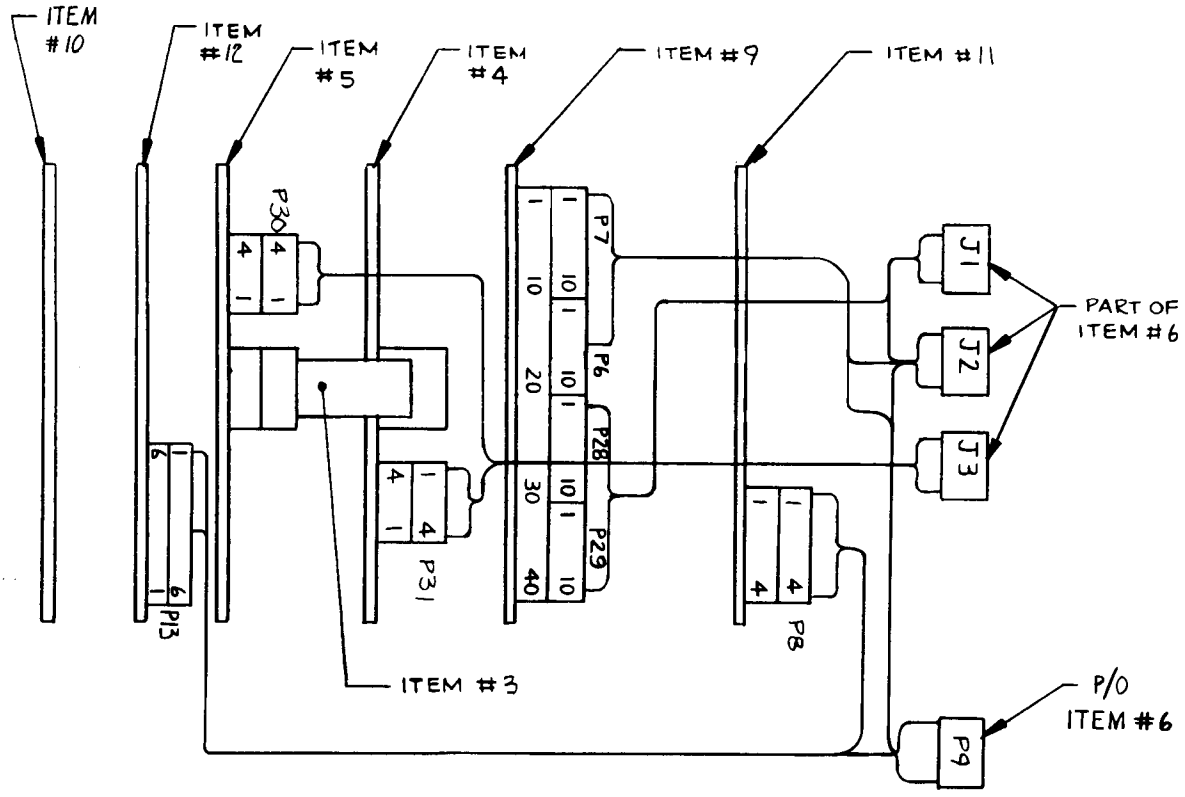

| REVISIONS | | | | |
|---|---|---|---|---|
| ZONE | LTR | DESCRIPTION | DATE | APPROVED |
| | – | SEE SHT 1 | | |

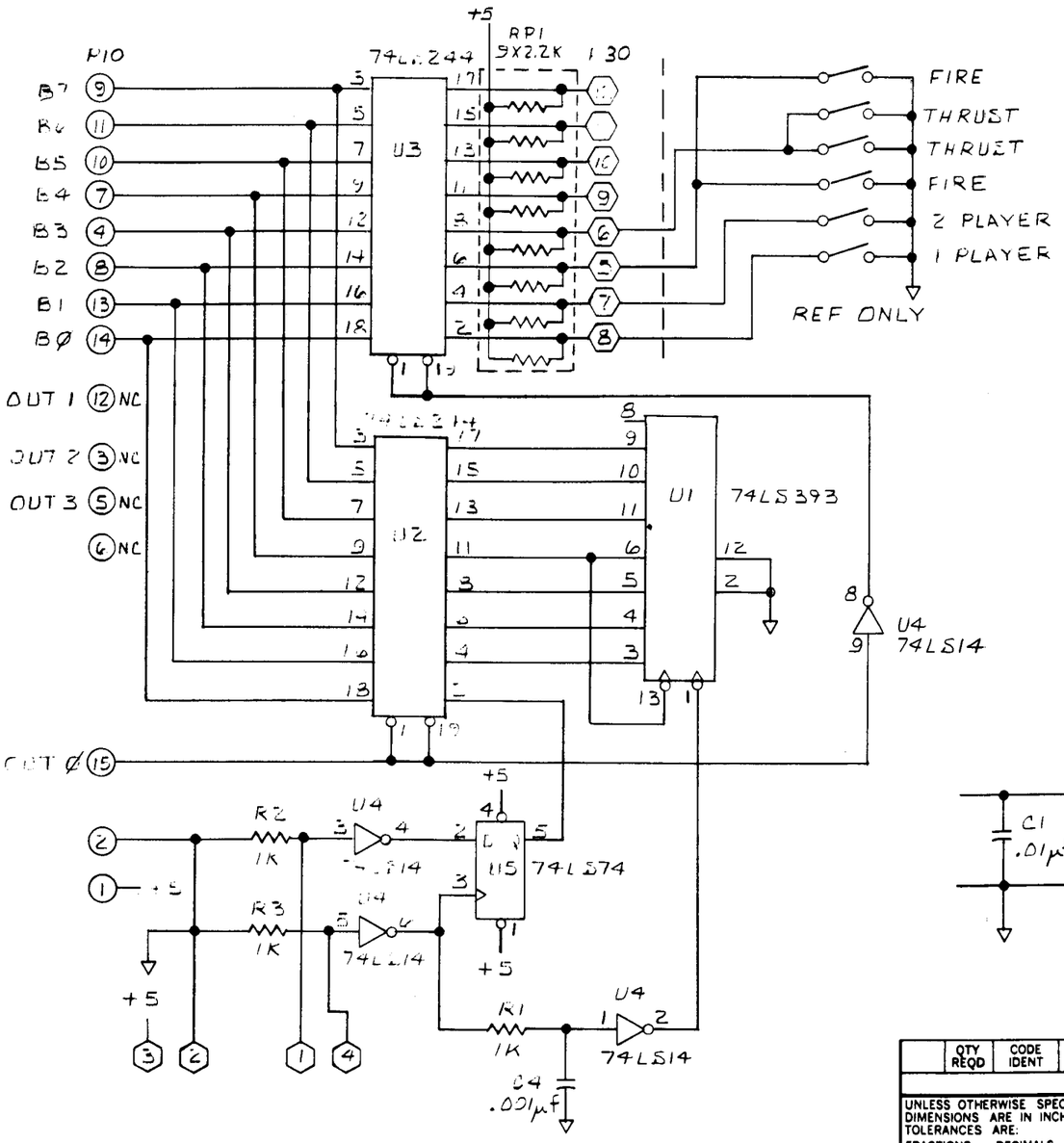


| QTY REQD | CODE IDENT | PART OR IDENTIFYING NO. | NOMENCLATURE OR DESCRIPTION | ITEM NO. |
|---|---|---|---|---|

PARTS LIST

UNLESS OTHERWISE SPECIFIED DIMENSIONS ARE IN INCHES
TOLERANCES ARE:
FRACTIONS ± DECIMALS .XX ± .XXX ± ANGLES ±

MATERIAL

FINISH

DO NOT SCALE DRAWING

| NEXT ASSY | USED ON |
|---|---|
| APPLICATION | |

CONTRACT NO.

| APPROVALS | DATE |
|---|---|
| DRAWN [illegible] | 4-8-82 |
| CHECKED J. GRICE | 4-8-82 |
| MECH | |
| ELEC | |
| MFG | |
| PROJECT | |

Gremlin/SEGA
San Diego, California 92123

# Single Player Control Panel Interface

| SIZE | CODE IDENT NO. | DRAWING NO. | REV |
|---|---|---|---|
| C | | 800-0374 | B |

SCALE NONE SHEET 4 OF 4

800-0374 B

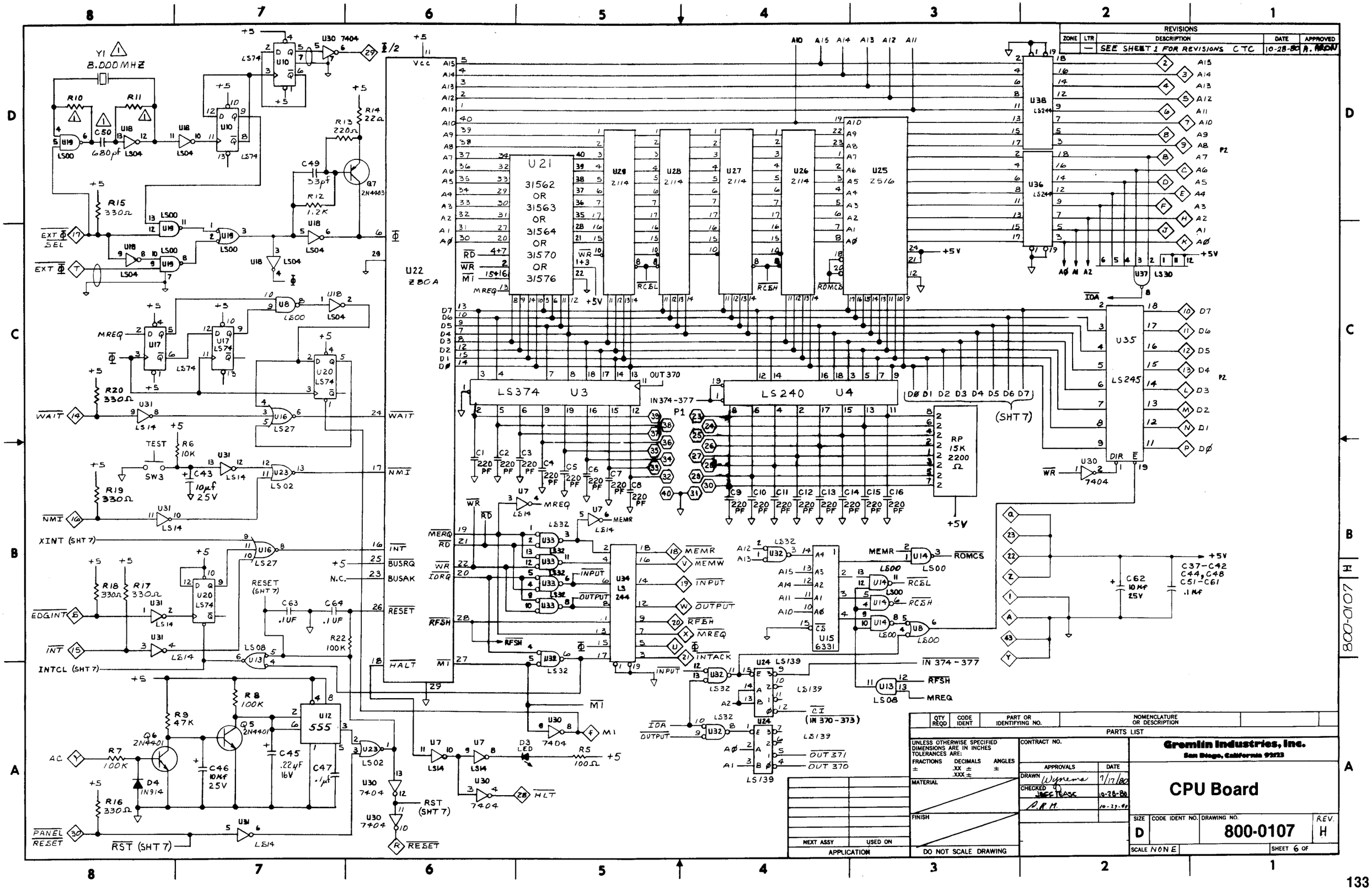


| QTY REQD | CODE IDENT | PART OR IDENTIFYING NO. | NOMENCLATURE OR DESCRIPTION |
|---|---|---|---|

PARTS LIST

UNLESS OTHERWISE SPECIFIED DIMENSIONS ARE IN INCHES TOLERANCES ARE:
FRACTIONS ± DECIMALS .XX ± .XXX ± ANGLES ±

MATERIAL

FINISH

DO NOT SCALE DRAWING

NEXT ASSY | USED ON

APPLICATION

CONTRACT NO.

| APPROVALS | | DATE |
|---|---|---|
| DRAWN | Wynema | 7/17/80 |
| CHECKED | JEFF TEASE | 10-28-80 |
| | P.R.M. | 10-27-80 |

**Gremlin Industries, Inc.**
San Diego, California 92123

# CPU Board

SIZE D | CODE IDENT NO. | DRAWING NO. 800-0107 | REV. H

SCALE NONE | SHEET 6 OF

800-0107 H

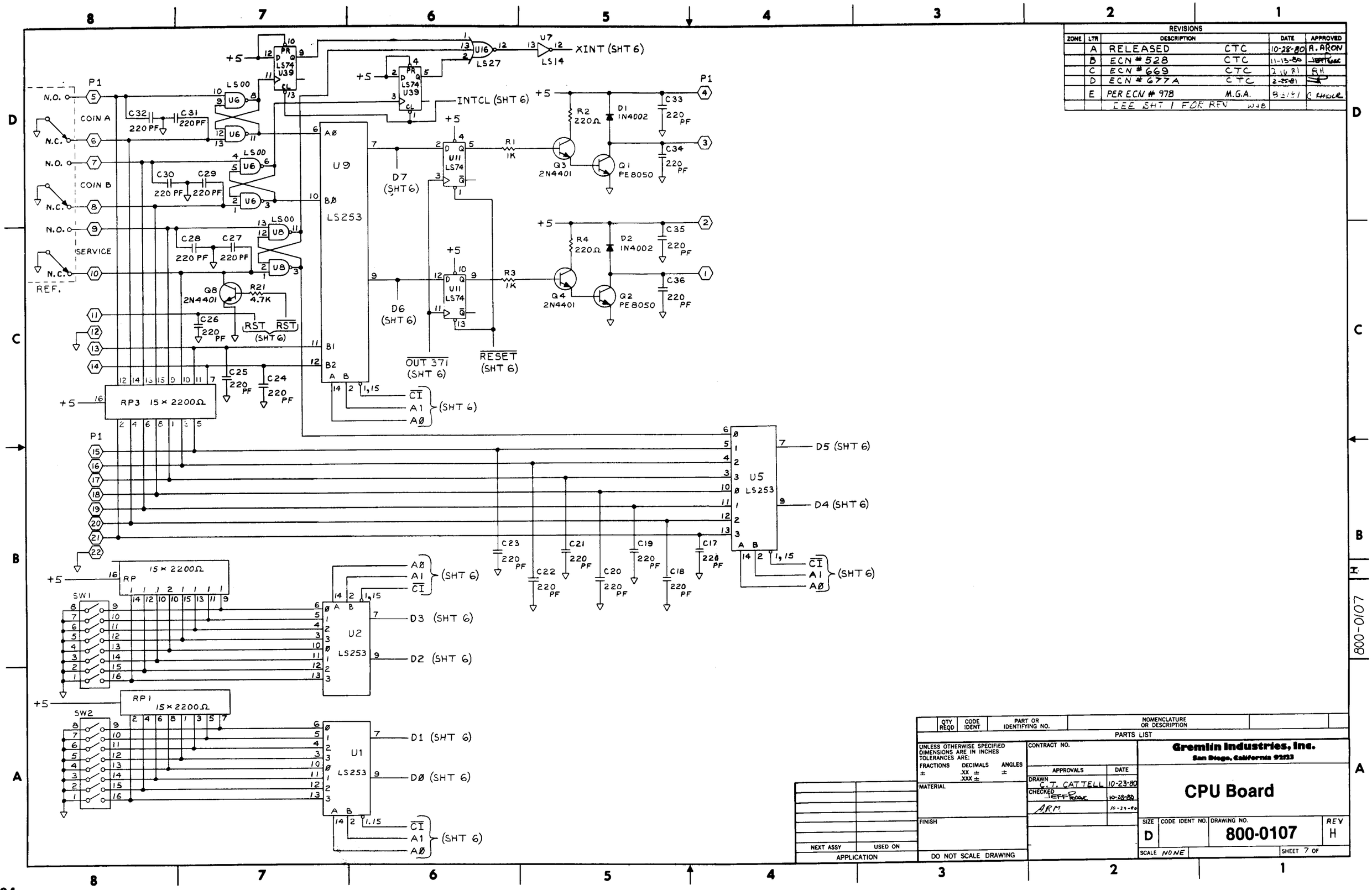

REVISIONS
ZONE | LTR | DESCRIPTION | DATE | APPROVED
A RELEASED CTC 10-28-80 A. ARON
B ECN # 528 CTC 11-13-80
C ECN # 669 CTC 2-16-81 RH
D ECN # 677A CTC 2-25-81
E PER ECN # 978 M.G.A. 8-31-81 C. KHIGLE
SEE SHT 1 FOR REV
XINT (SHT 6)
INTCL (SHT 6)
P1
N.O.
N.C.
COIN A
COIN B
SERVICE
REF.
LS00
LS74
U39
U16
LS27
U7
LS14
U9
LS253
U11
LS74
U5
LS253
U2
LS253
U1
LS253
RP3 15 × 2200Ω
RP 15 × 2200Ω
RP1 15 × 2200Ω
SW1
SW2
Q8 2N4401
Q3 2N4401
Q4 2N4401
Q1 PE8050
Q2 PE8050
D1 1N4002
D2 1N4002
D7 (SHT 6)
D6 (SHT 6)
D5 (SHT 6)
D4 (SHT 6)
D3 (SHT 6)
D2 (SHT 6)
D1 (SHT 6)
DØ (SHT 6)
OUT 371 (SHT 6)
RESET (SHT 6)
RST (SHT 6)
CI
A1
AØ
(SHT 6)
+5
QTY REQD | CODE IDENT | PART OR IDENTIFYING NO. | NOMENCLATURE OR DESCRIPTION
PARTS LIST
UNLESS OTHERWISE SPECIFIED DIMENSIONS ARE IN INCHES TOLERANCES ARE:
FRACTIONS ± DECIMALS .XX ± .XXX ± ANGLES ±
MATERIAL
FINISH
DO NOT SCALE DRAWING
NEXT ASSY | USED ON
APPLICATION
CONTRACT NO.
APPROVALS | DATE
DRAWN C.T. CATTELL 10-23-80
CHECKED JEFF PEDGE 10-28-80
A.R.M. 10-29-80
Gremlin Industries, Inc.
San Diego, California 92123
CPU Board
SIZE D | CODE IDENT NO. | DRAWING NO. 800-0107 | REV H
SCALE NONE | SHEET 7 OF
800-0107

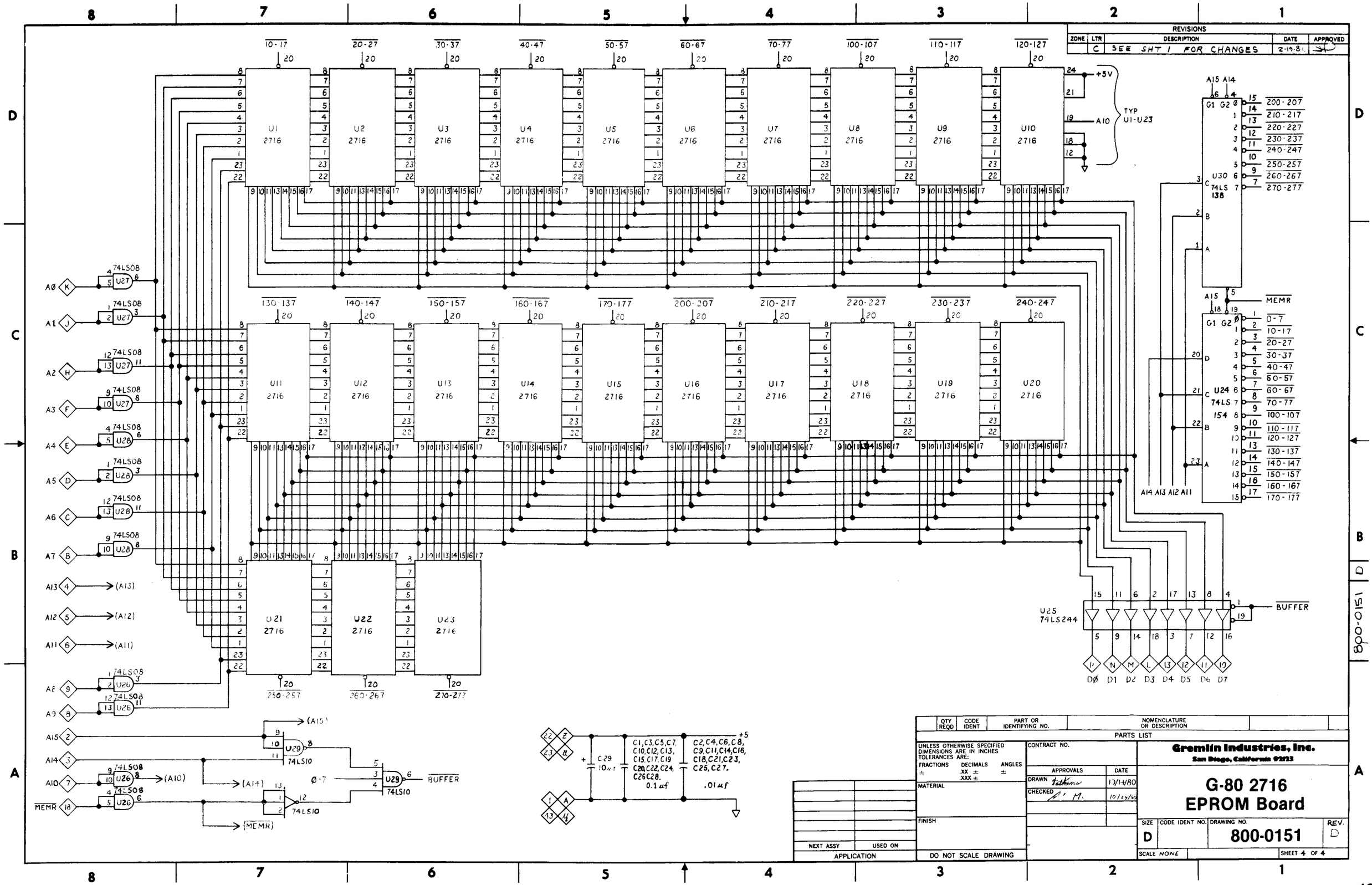
REVISIONS
ZONE LTR DESCRIPTION DATE APPROVED
C SEE SHT 1 FOR CHANGES 2-19-81
U1 2716
U2 2716
U3 2716
U4 2716
U5 2716
U6 2716
U7 2716
U8 2716
U9 2716
U10 2716
U11 2716
U12 2716
U13 2716
U14 2716
U15 2716
U16 2716
U17 2716
U18 2716
U19 2716
U20 2716
U21 2716
U22 2716
U23 2716
U30 74LS 138
U24 74LS 154
U25 74LS244
TYP U1-U23
+5V
A10
MEMR
BUFFER
74LS08
74LS10
C29 10uf
C1,C3,C5,C7, C10,C12,C13, C15,C17,C19 C20,C22,C24, C26C28. 0.1uf
C2,C4,C6,C8, C9,C11,C14,C16, C18,C21,C23, C25,C27. .01uf
QTY REQD
CODE IDENT
PART OR IDENTIFYING NO.
NOMENCLATURE OR DESCRIPTION
PARTS LIST
UNLESS OTHERWISE SPECIFIED DIMENSIONS ARE IN INCHES TOLERANCES ARE:
FRACTIONS ±
DECIMALS .XX ± .XXX ±
ANGLES ±
MATERIAL
FINISH
DO NOT SCALE DRAWING
CONTRACT NO.
APPROVALS
DATE
DRAWN 10/14/80
CHECKED 10/24/80
Gremlin Industries, Inc.
San Diego, California 92123
G-80 2716
EPROM Board
SIZE D
CODE IDENT NO.
DRAWING NO. 800-0151
REV. D
SCALE NONE
SHEET 4 OF 4
NEXT ASSY
USED ON
APPLICATION
800-0151 D

| REVISIONS | | | | |
|---|---|---|---|---|
| ZONE | LTR | DESCRIPTION | DATE | APPROVED |
| | | SEE SHT. 1 SD | | |

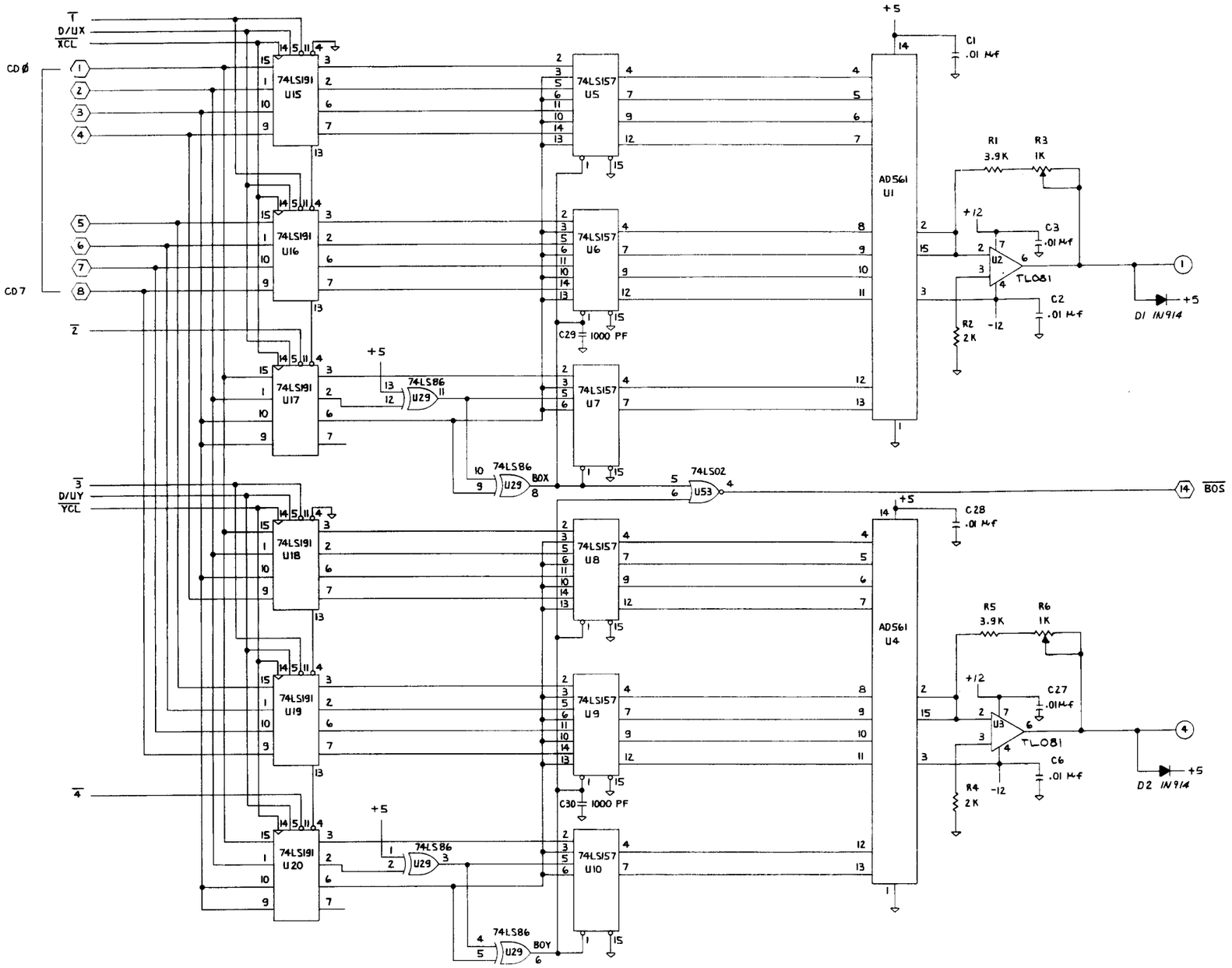


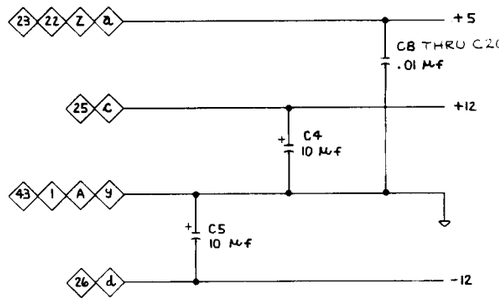


◇ = 86 PIN CONNECTOR .

○ = 4 PIN MOLEX .

⬡ = 24 PIN SOCKET .

NOTES :

| QTY REQD | CODE IDENT | PART OR IDENTIFYING NO. | NOMENCLATURE OR DESCRIPTION |
|---|---|---|---|
| | | | PARTS LIST |

UNLESS OTHERWISE SPECIFIED DIMENSIONS ARE IN INCHES
TOLERANCES ARE:
FRACTIONS ± DECIMALS .XX ± .XXX ± ANGLES ±

MATERIAL

FINISH

DO NOT SCALE DRAWING

CONTRACT NO.

| APPROVALS | DATE |
|---|---|
| DRAWN SON DUONG | 3-12-81 |
| CHECKED | 4-20-81 |
| | 4/20/81 |

**Gremlin Industries, Inc.**
San Diego, California 92123

# X-Y Timing Board

| SIZE | CODE IDENT NO. | DRAWING NO. | REV |
|---|---|---|---|
| D | | 800-0161 | P |

SCALE NONE SHEET 5 OF

| 800-3155 | 700-0054 |
|---|---|
| NEXT ASSY | USED ON |
| APPLICATION | |

800-0161 P

| REVISIONS | | | | |
|---|---|---|---|---|
| ZONE | LTR | DESCRIPTION | DATE | APPROVED |
| | | SEE SHT. 1 SD | | |

CD Ø … CD7

U56 VEC ∝

U55 SYM ∝

-5 +12 +5

U39 2708 (A1 A2 A3 A4 A5 A6 A7 A8 A9 A0)

U49 74LS374

U48 74LS374

74LS04 U40

DRAW

74LS00 U28

DCL

VCL

74LS244 U58

74LS244 U57

U46 74LS283 (A B A B, CO, C4, Σ1 Σ2)

U47 74LS283

U27 74LS125

U44 74LS283

U45 74LS283

74LS00 U28

74LS04 U30

XCL

YCL

U38 74LS175

U37 74LS175

U54 74LS244

U35 74LS175

U36 74LS175

74LS74 U26

74LS74 U25

D/UY

D/UX

| QTY REQD | CODE IDENT | PART OR IDENTIFYING NO. | NOMENCLATURE OR DESCRIPTION |
|---|---|---|---|
| | | PARTS LIST | |

UNLESS OTHERWISE SPECIFIED DIMENSIONS ARE IN INCHES
TOLERANCES ARE:
FRACTIONS ± DECIMALS .XX ± .XXX ± ANGLES ±

MATERIAL

FINISH

DO NOT SCALE DRAWING

CONTRACT NO.

| APPROVALS | DATE |
|---|---|
| DRAWN SON DUONG | 3-16-81 |
| CHECKED Jeff Rose | 4-20-81 |
| | 9/21/81 |

**Gremlin Industries, Inc.**
San Diego, California 92123

# X-Y Timing Board

| SIZE | CODE IDENT NO. | DRAWING NO. | REV |
|---|---|---|---|
| D | | 800-0161 | P |

SCALE NONE SHEET 6 OF

| 800-2155 | 700-0054 |
|---|---|
| NEXT ASSY | USED ON |

APPLICATION

800-0161 P.

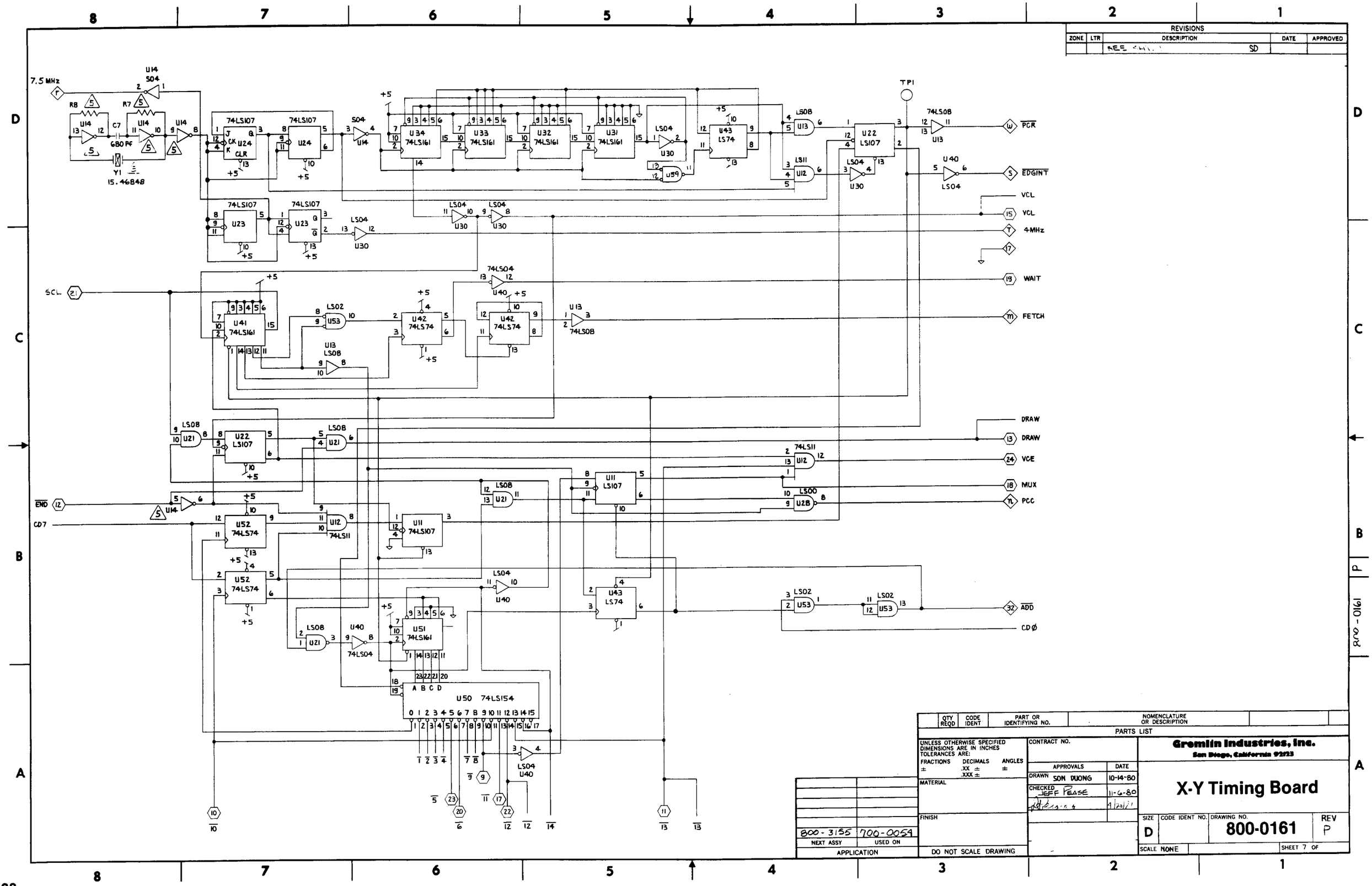

REVISIONS
ZONE
LTR
DESCRIPTION
DATE
APPROVED
SD
7.5 MHz
U14
S04
R8
R7
C7
680 PF
Y1
15.46848
74LS107
U24
U23
U34
74LS161
U33
U32
U31
LS04
U30
U59
U43
LS74
LS08
U13
LS11
U12
U22
LS107
74LS08
U40
TP1
PCR
EDGINT
VCL
4MHz
WAIT
FETCH
SCL
U41
74LS161
LS02
U53
U42
74LS74
74LS04
DRAW
VCE
MUX
PCC
END
CD7
U52
74LS74
74LS11
U11
LS107
LS00
U28
U51
74LS161
U50 74LS154
ADD
CDØ
QTY REQD
CODE IDENT
PART OR IDENTIFYING NO.
NOMENCLATURE OR DESCRIPTION
PARTS LIST
UNLESS OTHERWISE SPECIFIED DIMENSIONS ARE IN INCHES TOLERANCES ARE:
FRACTIONS ±
DECIMALS .XX ± .XXX ±
ANGLES ±
MATERIAL
FINISH
DO NOT SCALE DRAWING
CONTRACT NO.
APPROVALS
DATE
DRAWN SON DUONG 10-14-80
CHECKED JEFF PEASE 11-6-80
Gremlin Industries, Inc.
San Diego, California 92123
X-Y Timing Board
SIZE D
CODE IDENT NO.
DRAWING NO. 800-0161
REV P
SCALE NONE
SHEET 7 OF
800-3155
700-0054
NEXT ASSY
USED ON
APPLICATION

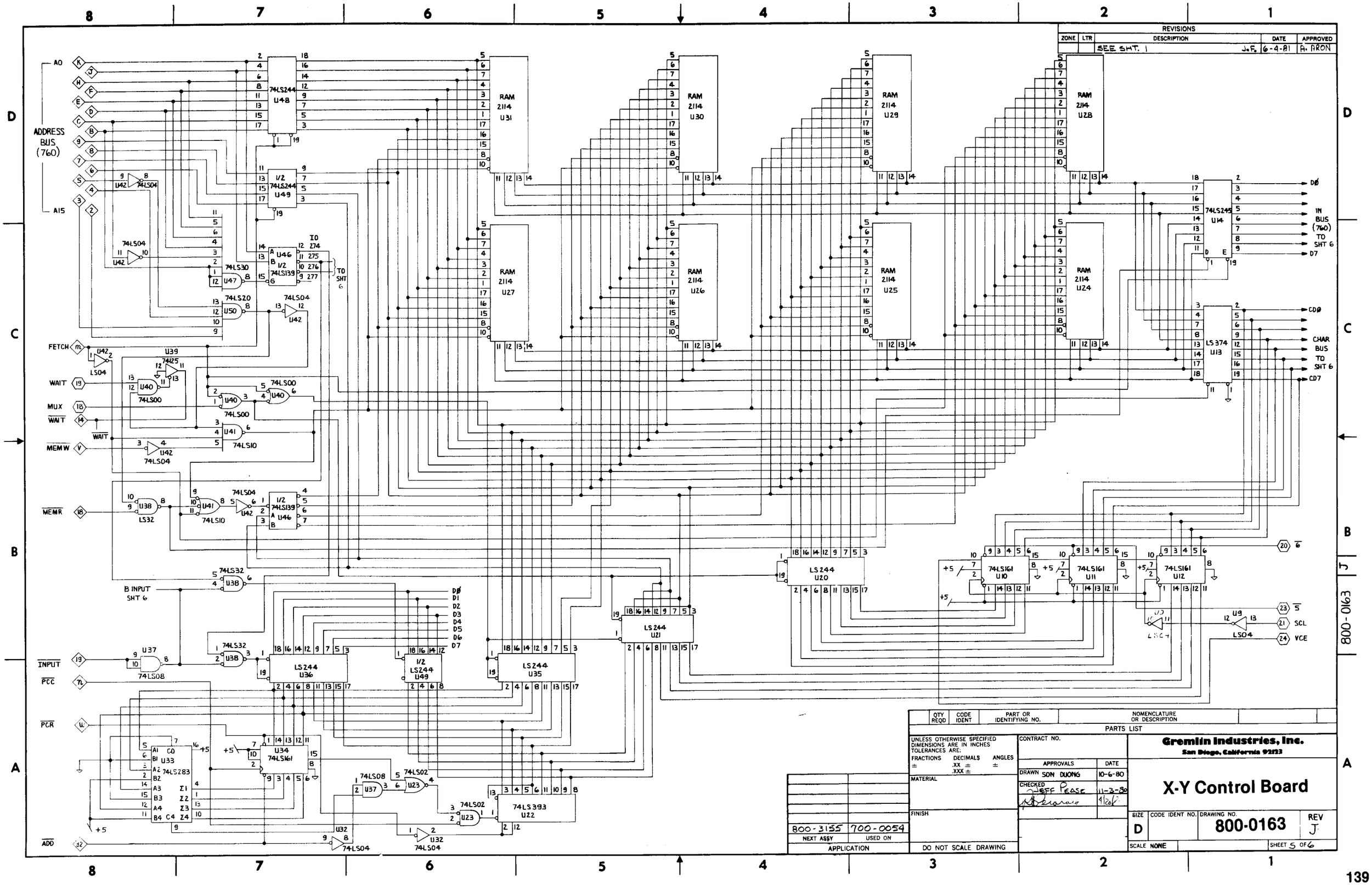
REVISIONS
ZONE LTR DESCRIPTION DATE APPROVED
SEE SHT. 1 J.F. 6-4-81 A. ARON
ADDRESS BUS (760)
A0
A15
74LS244 U48
1/2 74LS244 U49
RAM 2114 U31
RAM 2114 U30
RAM 2114 U29
RAM 2114 U28
RAM 2114 U27
RAM 2114 U26
RAM 2114 U25
RAM 2114 U24
74LS245 U14
LS374 U13
DØ
IN BUS (760) TO SHT 6
D7
CDØ
CHAR BUS TO SHT 6
CD7
FETCH
WAIT
MUX
WAIT
MEMW
MEMR
B INPUT SHT 6
INPUT
PCC
PCR
ADD
74LS04
74LS30
74LS20
74LS00
74LS10
74LS32
74LS08
74LS161
74LS283
74LS393
74LS02
LS244 U36
LS244 U35
LS244 U21
LS244 U20
74LS161 U10
74LS161 U11
74LS161 U12
LS04
SCL
VCE
QTY REQD
CODE IDENT
PART OR IDENTIFYING NO.
NOMENCLATURE OR DESCRIPTION
PARTS LIST
UNLESS OTHERWISE SPECIFIED DIMENSIONS ARE IN INCHES TOLERANCES ARE:
FRACTIONS ±
DECIMALS .XX ± .XXX ±
ANGLES ±
MATERIAL
FINISH
DO NOT SCALE DRAWING
CONTRACT NO.
APPROVALS DATE
DRAWN SON DUONG 10-6-80
CHECKED JEFF PEASE 11-3-80
Gremlin Industries, Inc.
San Diego, California 92123
X-Y Control Board
SIZE D
CODE IDENT NO.
DRAWING NO. 800-0163
REV J
SCALE NONE
SHEET 5 OF 6
800-3155 700-0054
NEXT ASSY USED ON
APPLICATION
800-0163

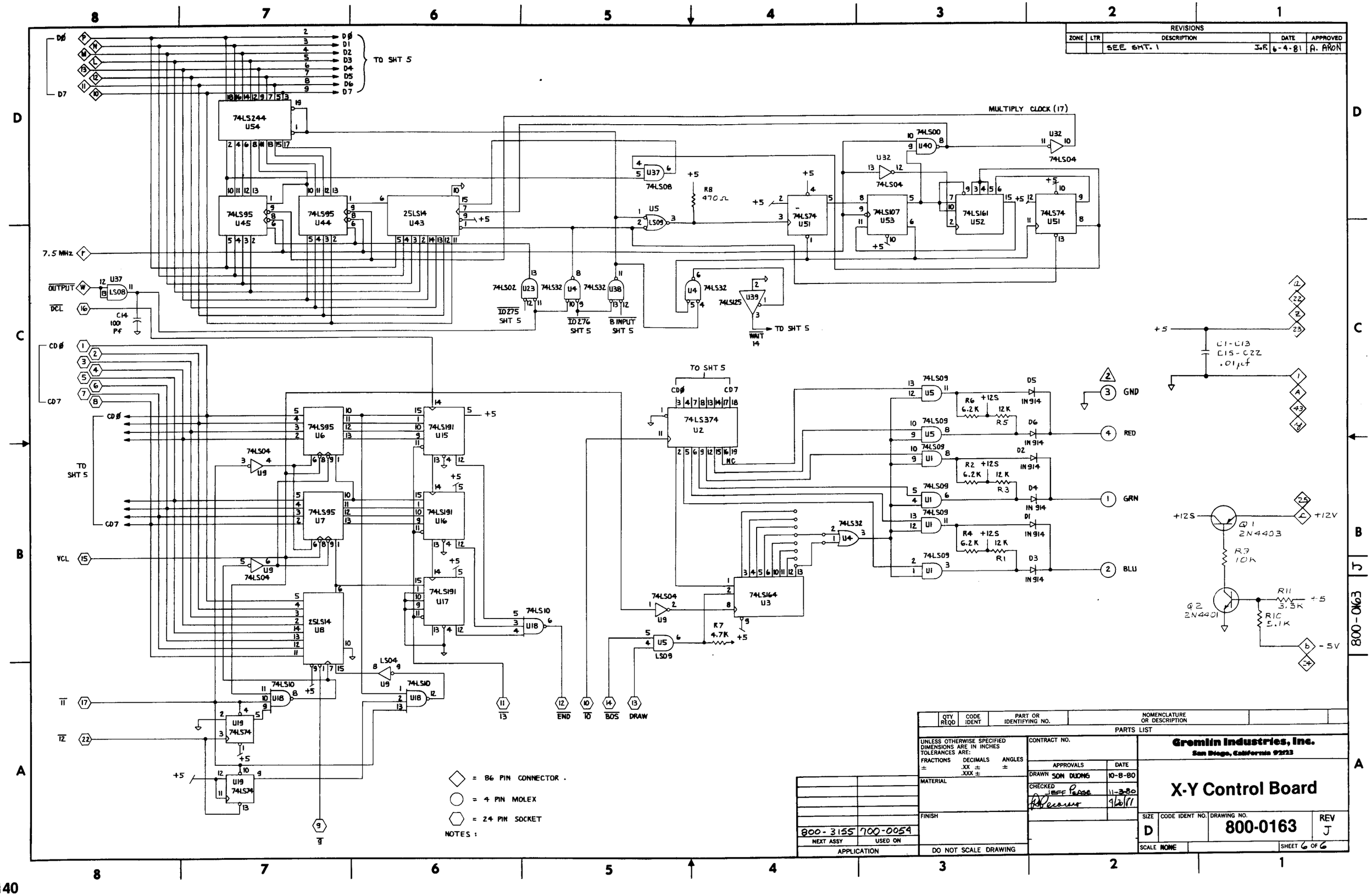

REVISIONS
ZONE | LTR | DESCRIPTION | DATE | APPROVED
SEE SHT. 1 | J.F. | 6-4-81 | A. ARON
TO SHT 5
MULTIPLY CLOCK (17)
74LS244 U54
74LS95 U45
74LS95 U44
25LS14 U43
74LS74 U51
74LS107 U53
74LS161 U52
74LS00 U40
74LS04 U32
74LS08 U37
74LS02 U23
74LS32 U4
74LS125 U39
IO275 SHT 5
IO276 SHT 5
B INPUT SHT 5
WAIT 14
7.5 MHz
OUTPUT
DCL
C14 100 PF
74LS374 U2
74LS95 U6
74LS95 U7
74LS191 U15
74LS191 U16
74LS191 U17
25LS14 U8
74LS10 U18
74LS164 U3
74LS09 U5
74LS32 U4
74LS04 U9
74LS74 U19
LS04 U9
LS09 U5
R8 470Ω
R7 4.7K
R6 6.2K
R5 12K
R2 6.2K
R3 12K
R4 6.2K
R1 12K
D5 IN914
D6 IN914
D2 IN914
D4 IN914
D1 IN914
D3 IN914
GND
RED
GRN
BLU
C1-C13 C15-C22 .01μf
Q1 2N4403
Q2 2N4401
R9 10K
R11 3.3K
R10 5.1K
+12S
+12V
-5V
VCL
END
BOS
DRAW
= 86 PIN CONNECTOR
= 4 PIN MOLEX
= 24 PIN SOCKET
NOTES :
QTY REQD | CODE IDENT | PART OR IDENTIFYING NO. | NOMENCLATURE OR DESCRIPTION
PARTS LIST
UNLESS OTHERWISE SPECIFIED DIMENSIONS ARE IN INCHES TOLERANCES ARE:
FRACTIONS ± DECIMALS .XX ± .XXX ± ANGLES ±
MATERIAL
FINISH
DO NOT SCALE DRAWING
CONTRACT NO.
APPROVALS | DATE
DRAWN SON DUONG | 10-8-80
CHECKED JEFF PEASE | 11-3-80
9/26/81
Gremlin Industries, Inc.
San Diego, California 92123
X-Y Control Board
SIZE D | CODE IDENT NO. | DRAWING NO. 800-0163 | REV J
SCALE NONE | SHEET 6 OF 6
800-3155 | 700-0054
NEXT ASSY | USED ON
APPLICATION
800-0163 J

| REVISIONS | | | | |
|---|---|---|---|---|
| ZONE | LTR | DESCRIPTION | DATE | APPROVED |
| | | SEE SHT 1 FOR REV | | |

INSTALL JUMPERS

| | PROG | DATA |
|---|---|---|
| 2716 | A,C | E;G/I/K/M; "16" |
| i2732 | B,C | F;G/I/K/M; "32" |
| TMS 2532 | A,D | E;H/J/L/N; "32" |

| QTY REQD | CODE IDENT | PART OR IDENTIFYING NO. | NOMENCLATURE OR DESCRIPTION |
|---|---|---|---|
| | | | PARTS LIST |

UNLESS OTHERWISE SPECIFIED DIMENSIONS ARE IN INCHES
TOLERANCES ARE:
FRACTIONS ± DECIMALS .XX ± .XXX ± ANGLES ±

MATERIAL

FINISH

DO NOT SCALE DRAWING

CONTRACT NO.

| APPROVALS | DATE |
|---|---|
| DRAWN CATTELL | 3/11/81 |
| CHECKED | |

Gremlin Industries, Inc.
San Diego, California 92123

# Speech Board

| SIZE | CODE IDENT NO. | DRAWING NO. | REV |
|---|---|---|---|
| D | | 800-0294 | H |

SCALE NONE — SHEET 5 OF 5

| 800-3176 | 800-0294 |
|---|---|
| 800-3139-XX | 800-3144-XX |
| NEXT ASSY | USED ON |

APPLICATION

800-0183 H

| REVISIONS | | | | |
|---|---|---|---|---|
| ZONE | LTR | DESCRIPTION | DATE | APPROVED |
| | | SEE SH #1 SD | | |

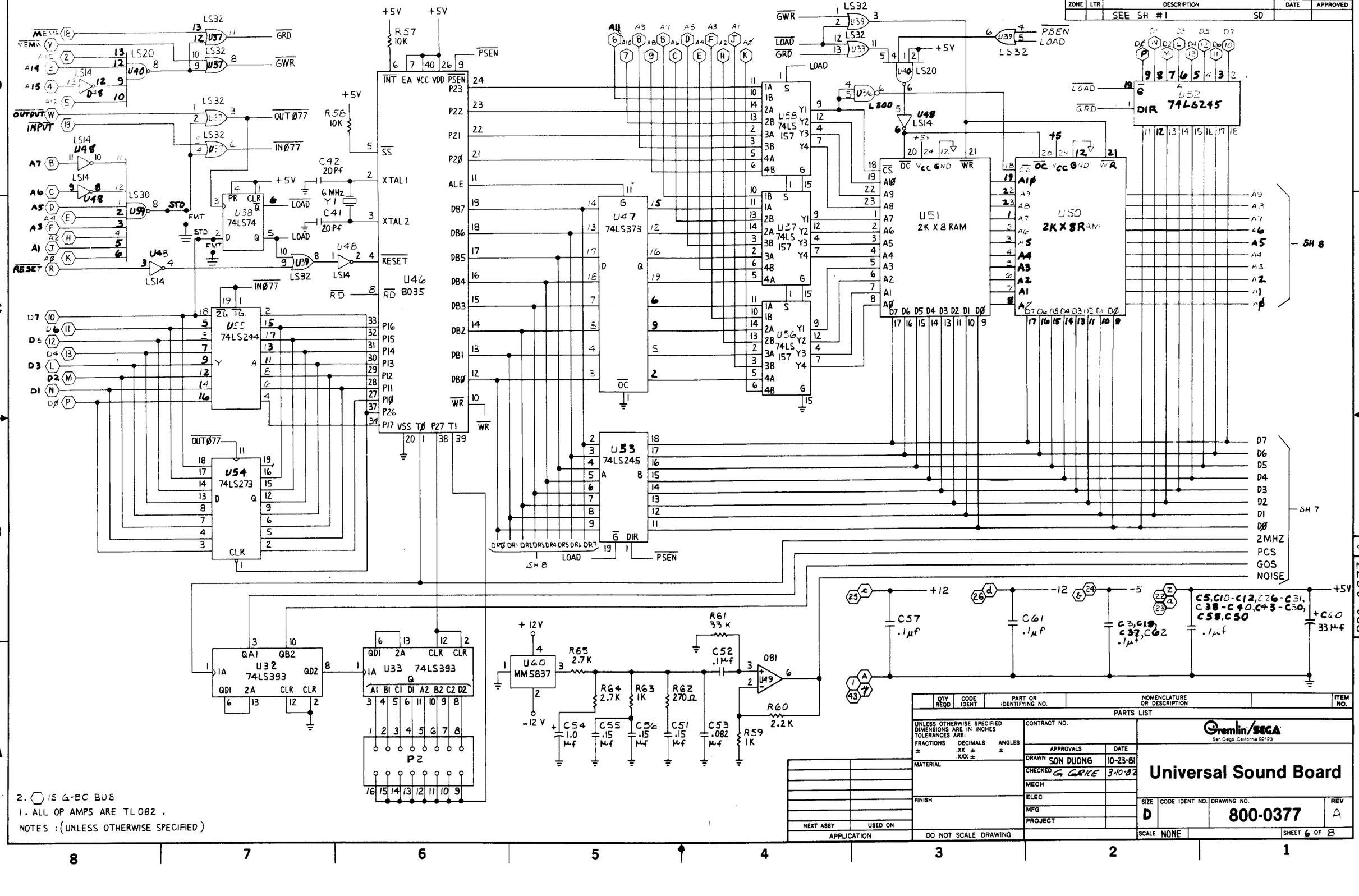


2. ⬡ IS G-BC BUS
1. ALL OP AMPS ARE TL082 .
NOTES :(UNLESS OTHERWISE SPECIFIED)

| QTY REQD | CODE IDENT | PART OR IDENTIFYING NO. | NOMENCLATURE OR DESCRIPTION | ITEM NO. |
|---|---|---|---|---|

PARTS LIST

UNLESS OTHERWISE SPECIFIED DIMENSIONS ARE IN INCHES
TOLERANCES ARE:
FRACTIONS ± DECIMALS .XX ± .XXX ± ANGLES ±

MATERIAL

FINISH

DO NOT SCALE DRAWING

CONTRACT NO.

| APPROVALS | DATE |
|---|---|
| DRAWN SON DUONG | 10-23-81 |
| CHECKED G. GRIKE | 3-10-82 |
| MECH | |
| ELEC | |
| MFG | |
| PROJECT | |

| NEXT ASSY | USED ON |
|---|---|
| APPLICATION | |

Gremlin/SEGA
San Diego, California 92123

# Universal Sound Board

| SIZE | CODE IDENT NO. | DRAWING NO. | REV |
|---|---|---|---|
| D | | 800-0377 | A |

SCALE NONE SHEET 6 OF 8

800-0377 A

| REVISIONS | | | | |
|---|---|---|---|---|
| ZONE | LTR | DESCRIPTION | DATE | APPROVED |
| | | SEE SH 1 SD | | |

| QTY REQD | CODE IDENT | PART OR IDENTIFYING NO. | NOMENCLATURE OR DESCRIPTION | ITEM NO. |
|---|---|---|---|---|

PARTS LIST

UNLESS OTHERWISE SPECIFIED DIMENSIONS ARE IN INCHES
TOLERANCES ARE:
FRACTIONS ± DECIMALS .XX ± .XXX ± ANGLES ±

MATERIAL

FINISH

DO NOT SCALE DRAWING

CONTRACT NO.

| APPROVALS | DATE |
|---|---|
| DRAWN SON DUONG | 10-28-81 |
| CHECKED G. GRICE | 3-10-82 |
| MECH | |
| ELEC | |
| MFG | |
| PROJECT | |

NEXT ASSY | USED ON
APPLICATION

Gremlin/SEGA
San Diego, California 92123

# Universal Sound Board

| SIZE | CODE IDENT NO. | DRAWING NO. | REV |
|---|---|---|---|
| D | | 800-0377 | A |

SCALE NONE | SHEET 7 OF 8

800-0377 A

| REVISIONS | | | | |
|---|---|---|---|---|
| ZONE | LTR | DESCRIPTION | DATE | APPROVED |
| | – | SEE SHT 1 WJB | | |

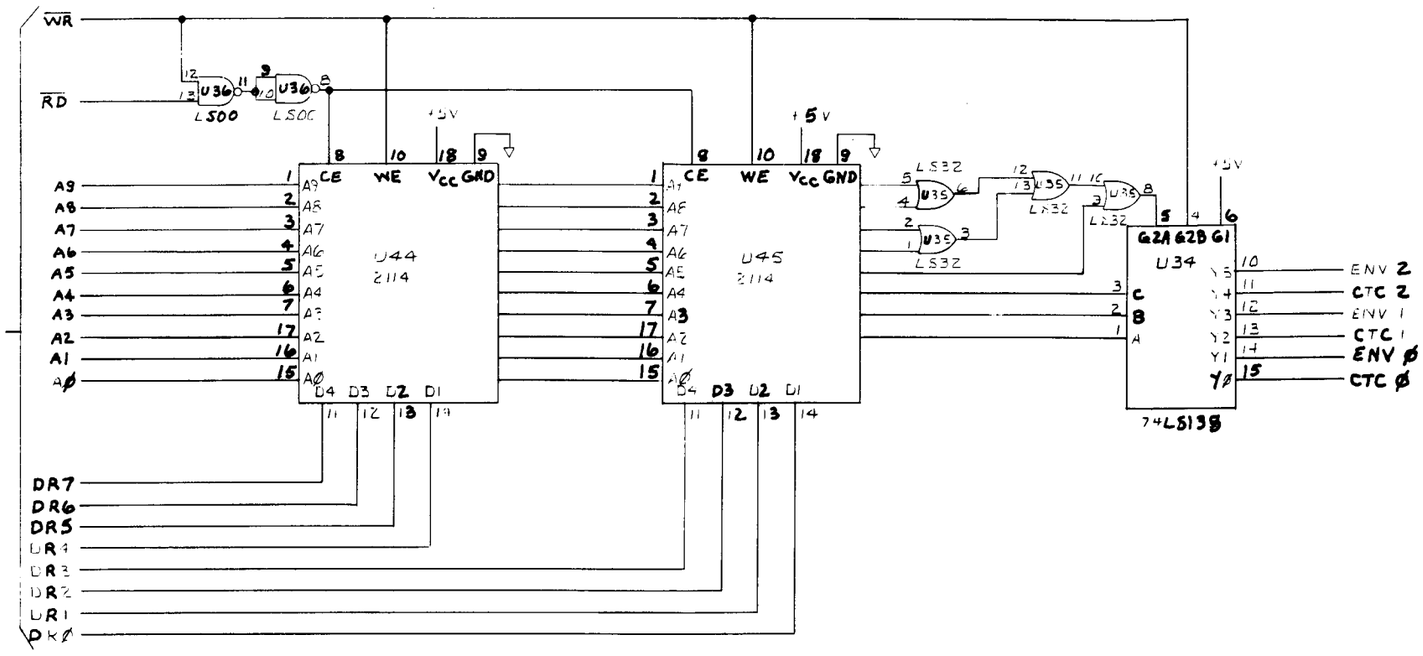


| QTY REQD | CODE IDENT | PART OR IDENTIFYING NO. | NOMENCLATURE OR DESCRIPTION | ITEM NO. |
|---|---|---|---|---|

PARTS LIST

UNLESS OTHERWISE SPECIFIED DIMENSIONS ARE IN INCHES TOLERANCES ARE:
FRACTIONS ± DECIMALS .XX ± .XXX ± ANGLES ±

MATERIAL

FINISH

DO NOT SCALE DRAWING

CONTRACT NO.

| APPROVALS | DATE |
|---|---|
| DRAWN Wynema | 4-14-82 |
| CHECKED G Arice | 6-22-82 |
| MECH | |
| ELEC | |
| MFG | |
| PROJECT | |

Gremlin/SEGA
San Diego, California 92123

# Universal Sound Board

| SIZE | CODE IDENT NO. | DRAWING NO. | REV |
|---|---|---|---|
| D | | 800-0377 | A |

SCALE NONE SHEET 8 OF 8

| NEXT ASSY | USED ON |
|---|---|
| APPLICATION | |

800-0377 A

| REVISIONS | | | | |
|---|---|---|---|---|
| ZONE | LTR | DESCRIPTION | DATE | APPROVED |
| | A | RELEASED CTC | 12-16-80 | |

(VAC)
230 — 4
115 — 3
100 — 2
COM — 1
RED — 5 — C
RED BLK — 6
RED — 7
VIO — 11 — A
GRY — 12
VIO — 13
ORN — 14 — D — 92V — TO COLOR X Y MONITOR
WHT/ORN — 15
ORN — 16
WHT — 17 — E — 115 VAC — TO COLOR RASTER MONITOR
WHT/BLK — 18 — 100 VAC
BLK — 19 — COM
BRN — 8 — B
BRN/BLK — 9
BRN — 10
REF XFMR #560-0055

P4 10, 9, 8 — MR501 D6 D7 D8 D9 — C16 4700 UF — C15 4700 UF
P3 3 AC — F2 3A — F1 3A — C14 .1 UF
P1 4 AUDIO IN #1 — C5 10 UF
P1 2 3 — P2 2 3 — P2 4 AUDIO OUT #1
R8 22Ω — 2N4403 Q1 — C9 100 PF — TIP 120
R7 680 — 2N4401 Q2 — 2N4401 Q3 — C7 20PF — D5 IN914 — R15 0.2Ω
R5 22K — R6 10K — R9 22K — R10 1K — C8 10 UF — D4 IN914 — R14 0.2Ω — R2 10Ω — C2 0.1 UF
TIP 125 — C10 10UF — R22 2.2K — R21 2.2K
P4 7, 6, 5, 4 — MR501 D11 — MR751 D10 — D12 MR751 — D13 MR501 — F3 10A
R23 100K — D1 IN914 — TIP 141 — R25 .05Ω — R32 100Ω — R26 1.8K
C32 6800 UF/16V — C33 6800 UF/16V — C34 6800 UF/16V — C21 .01 UF — 2N4403 Q7 — R30 10K
LM 723 U1 — R29 1K — R31 1K — R28 3.3K — C20 .005 UF — R27 1K
C13 .1 UF
R33 220Ω
F4 1.5A — 320 T-5 — C30 3300 UF 16V — C29 .01 UF — C31 10 UF — C19 10 UF — C17 100 uF 25V
P3 10, 9, 8 — +5V 4A — 7 — -5V 1A
P3 3, 2, 1 — MR501 D17 — D16 — D15 — D14
340 T-12 — C27 4700 UF — C22 .01UF — C24 10UF — C18 10UF — +12V 1A — 6, 5, 4 — GND
320 T-12 — C28 4700 UF — C25 .01UF — C26 10UF — C23 10UF — -12V 1A — P3 1

FOR FUTURE USE
P1 1 AUDIO IN #2 — C1 10 UF
R13 22Ω — 2N4403 Q4 — C6 100 PF — TIP 120
R3 680 — 2N4401 Q5 — 2N4401 Q6 — C3 20 PF — D3 IN914 — R20 0.2Ω
R1 22K — R11 10K — R12 22K — R4 1K — C4 10UF — D2 IN914 — R16 0.2Ω — R17 10Ω — C11 0.1UF — P2 1 AUDIO OUT #2
TIP 125 — C12 10UF — R18 2.2K — R19 2.2K

NOTE: ALL RESISTANCE VALUES ARE IN OHMS, 1/2 W ±5%.

| QTY REQD | CODE IDENT | PART OR IDENTIFYING NO. | NOMENCLATURE OR DESCRIPTION |
|---|---|---|---|

PARTS LIST

UNLESS OTHERWISE SPECIFIED DIMENSIONS ARE IN INCHES
TOLERANCES ARE:
FRACTIONS ± — DECIMALS .XX ± .XXX ± — ANGLES ±

MATERIAL
FINISH
DO NOT SCALE DRAWING
NEXT ASSY — USED ON — APPLICATION

CONTRACT NO.

| APPROVALS | DATE |
|---|---|
| DRAWN CATTELL | 12/11/80 |
| CHECKED JEFF PEARCE | 12/16/80 |

Gremlin Industries, Inc.
San Diego, California 92123

# G-80 Power Supply

SIZE D — CODE IDENT NO. — DRAWING NO. 800-0191 — REV H
SCALE NONE — SHEET 3 OF 3

800-0191 H

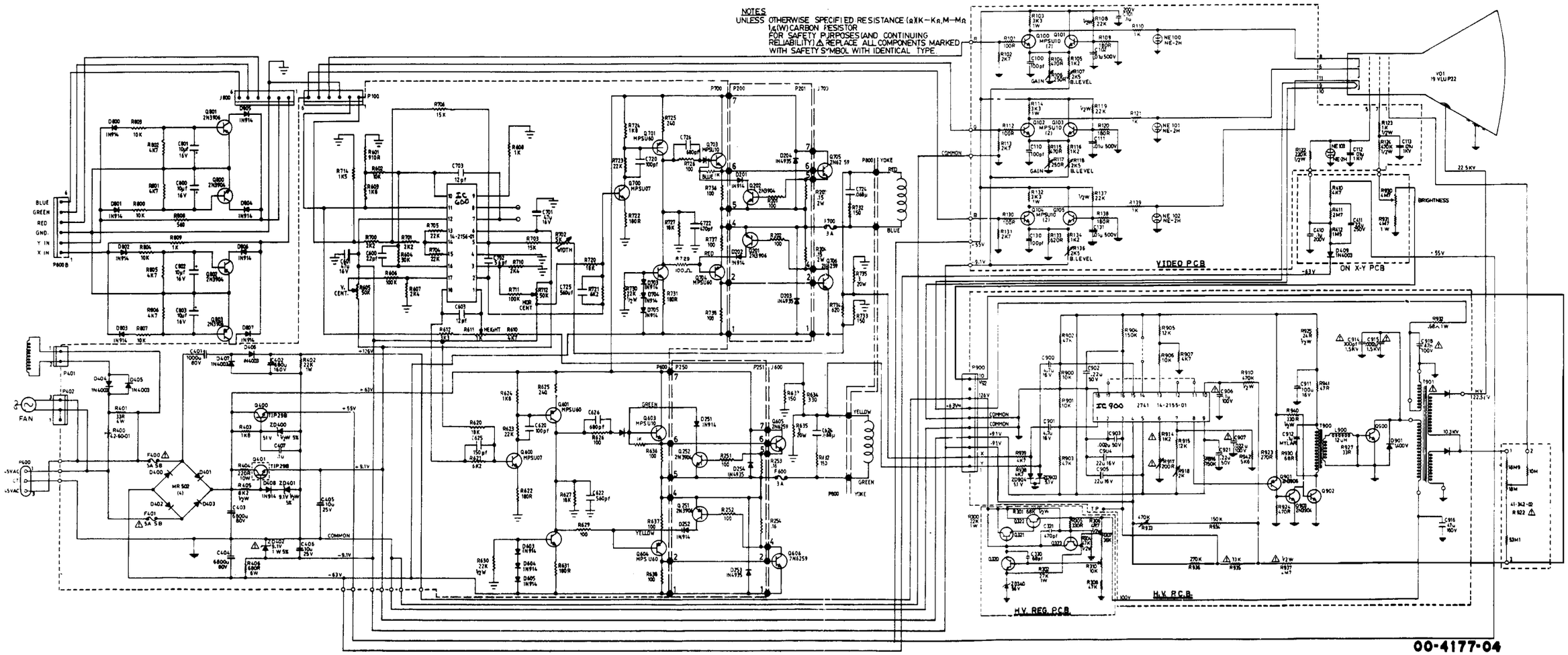


# Model Number GO8-003

**19" X-Y Color Monitor**
**200-0025**